Index

50 - AIR CONDITIONING

CONTENTS

DESCRIPTION P. 3
Introduction
General

AIR CONDITIONER CONTROL UNIT P. 5

OPERATION P. 6
Automatic climate control
Manual settings
Temperature display

CHECKS AND ADJUSTMENTS P. 11
Preliminary checks
System draining and refilling
Compressor oil level check
First running - RESET

DIAGNOSTICS P. 15
Self-diagnostic procedure
Recovery strategies
User diagnostics

DESCRIPTION

Introduction

The vehicle air conditioning system is controlled by an Electronic Control Unit (ECU) that manages the heating system connected with the engine cooling system and the air conditioning connected with a compressor.
The air conditioning ECU operates the heating or conditioning in the passenger compartment according to the temperature required by the driver and the data received from the sensors.

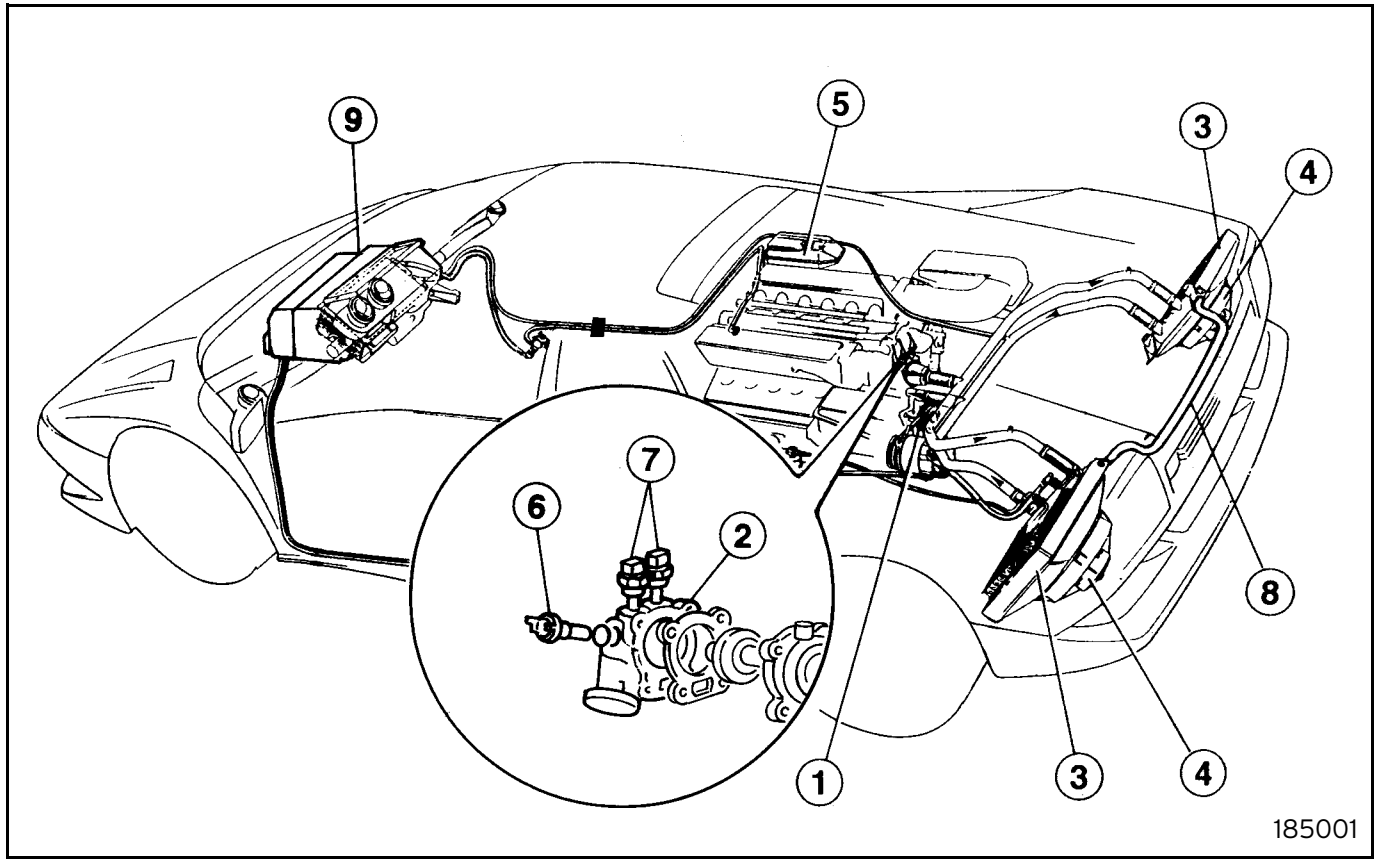

Fig. 1 - Air conditioning layout

1 Evaporator group
2 Heating solenoid valve
3 Expansion tank for coolant
4 Condenser electric fan
5 Left-hand coolant radiator
6 Air conditioner condenser
7 Air conditioner compressor
8 Dehydrating filter
9 Pump

General

The air conditioning system has the following features:

- automatic temperature-ventilation-air distribution control functions
- recirculation function
- air flow distribution function.

The user can select the required temperature and the air flow distribution pattern.
System operation is governed by a specific control unit.
The control unit implements heat regulating strategies according to the signals (inputs) from:

- External air temperature sensor
- Internal air temperature sensor
- Conditioned air temperature at vent outlet sensor
- Solar irradiation sensor.

System software resides in the control unit. The software includes a set of strategies, each of which guarantees a specific function in the system.
By means of the inputs mentioned above, each strategy processes a set of parameters on the basis of the data maps stored in specific areas in the control unit and controls the actuators (outputs). The latter are devices allowing the system to reach and keep the required temperature comfort in the passenger compartment. Actuators include the following:

- Distribution actuator
- Fan
- Recirculation actuator
- Mixer
- Compressor.

AIR CONDITIONER CONTROL UNIT

The control unit sets the parameters to obtain the required temperature in the passenger compartment. Specifically, the control unit:

- acquires information on internal and outside temperature and on solar irradiation by means of specific sensors.
- sets the air speed by means of the fan.
- manages recirculation function by means of an actuator.
- sets the input air temperature by means of a mixing tap.
- governs compressor operation by means of an electromagnetic coupling.

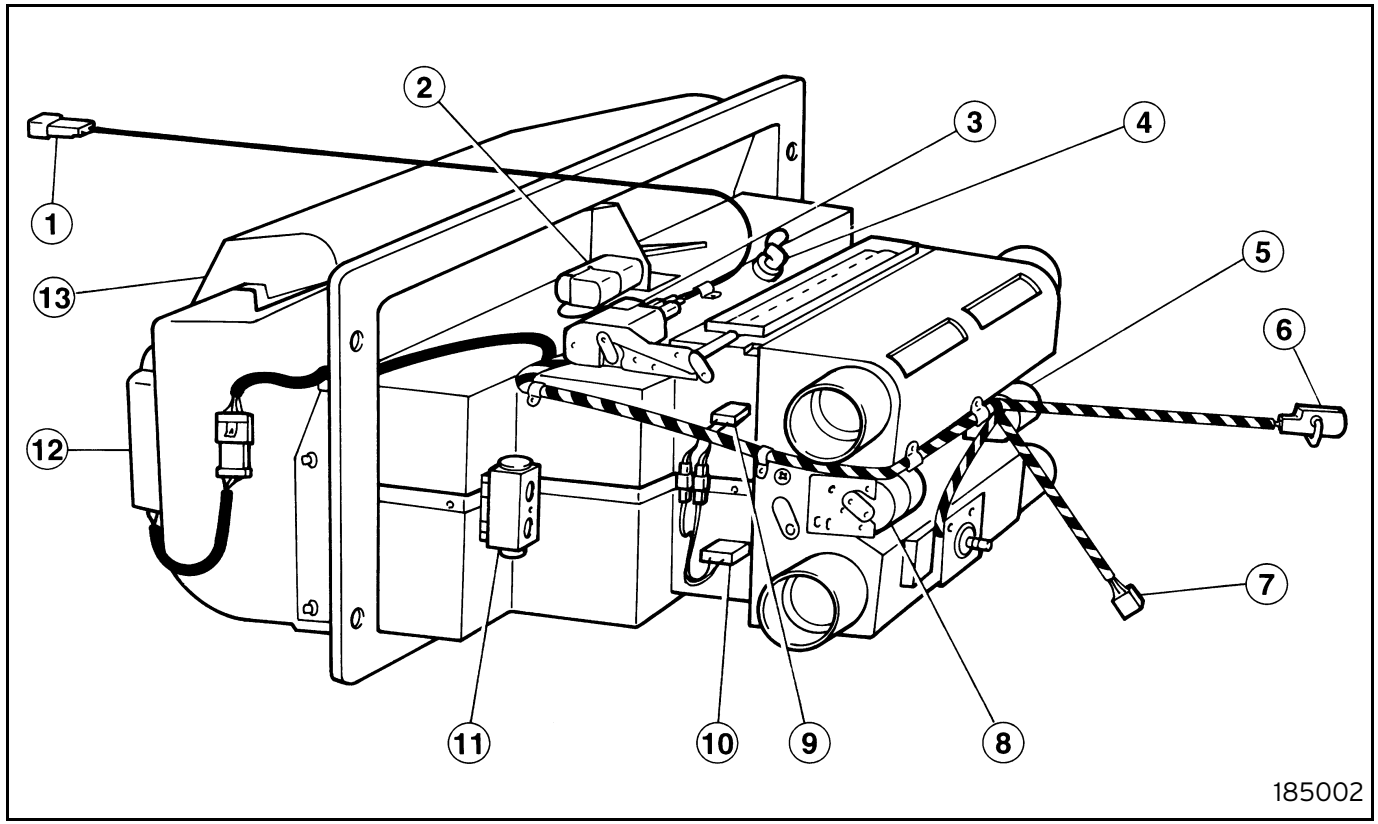

Fig. 2 - Air conditioning assembly

1 Solar irradiation sensor (IRR)
2 Recirculation function actuator
3 Defrost function sensor
4 Frost sensor temperature sensor (TSAB)
5 Upper vent outlet temperature
6 Outside temperature sensor (TE)
7 Passenger compartment temperature sensor (TA)
8 Power vent actuator
9 Upper vent outlet temperature (TT1)
10 Lower vent outlet temperature (TT2)
11 Expansion valve
12 Fan speed adjustment device
13 Fan

OPERATION

Automatic climate control

This is the most common operating condition. Temperature settings are made automatically to ensure maximum comfort for occupants.
In this condition, information shown on the display includes required temperature, recirculation status, air distribution status, ventilation status, AUTO message next to ventilation and air distribution.

Start-up transient strategy (cold engine)

The start-up transient strategy is a special operating method designed to ensure comfort to occupants also when the passenger compartment heating system is not able to work.
This is because when the engine is cold the system does not have an adequate source of heat. Starting to operate the system in such conditions would entail letting in a considerable amount of cold air which may annoy occupants.
In such condition, the system makes the following settings:

- maximum heat
- minimum ventilation
- DEF distribution
- recirculation open
- compressor on

The system holds these settings until the engine coolant reaches a value which is sufficient for automatic climate control.

Temperature

The system adjusts the temperature at the vents to reach the required value (set on the display) according to the following parameters:

- passenger compartment temperature (TA)
- required temperature (TR)
- outside temperature (TE)
- fan speed (Q)
- solar irradiation (IRR).

The temperature is computed by means of thermal balance equations in the passenger compartment applying suitable mathematical algorithms.
The adjustment range goes from 16°C (LO) to 31°C (HI).

System operation also depends on the outside temperature. This is because, when the outside temperature is lower than 16 °C, the system will output air which is warmer than the outside air, also when LO is selected. In the same way, the system will output air which is colder than the outside air when HI is selected and the outside temperature is higher than 31 °C.

Ventilation

The fan speed is computed according to the following parameters:

- passenger compartment temperature
- required temperature
- outside temperature
- solar irradiation.

The fan speed can be set to eight levels, each of which is a 10% increase of the maximum delivery from a 30% starting level.

Distribution

For computing air distribution, the automatic climate control system considers the air temperature at vent outlet, given the general rule that in order to ensure comfort the air temperature at the vents should be "lower" as the temperature increases. Specifically:

- warm air (TT>50 °C), the air flow should reach the passenger from the upper and lower vents (HEAT);
- cool air (TT<30 °C), the air flow should be frontal (VENT);
- intermediate temperatures, a "foot/face" air flow pattern is adopted (BI-LEVEL).

The air flow distribution pattern is adjusted on the basis of a hysterisis threshold to ensure greater stability in the system.

Recirculation

The conditions which must be verified at any time and according to which the system automatically computes the recirculation function are:

- outside temperature >= 28 °C
- inside temperature < outside temperature
- compressor on.

The system opens the recirculation flap to let in outside air when the outside temperature drops to under 26 °C.
The recirculation flap will be opened in any case after thirty consecutive minutes for two minutes and then closed again to let fresh air into the passenger compartment. The recirculation function symbol on the display will flash when this occurs.

HI

In HI condition, the system provides the maximum possible heat output. Specifically, the system sets to the following conditions:

- maximum air temperature at vents
- maximum fan speed
- compressor off
- recirculation open
- HEAT air flow distribution pattern.

The system will remain in HI condition until a new command is received from the user. In this case, manual settings (fan speed, air flow and recirculation) will be allowed and will have priority over the automatic settings.

LO

In LO condition, the system provides the maximum possible cooling output. Specifically, the system sets to the following conditions:

- minimum air temperature at vents
- maximum fan speed
- compressor on
- automatic recirculation
- VENT air flow distribution pattern.

The system will remain in LO condition until a new command is received from the user. In this case, manual settings (fan speed, air flow and recirculation) will be allowed and will have priority over the automatic settings.
The circulation control will always be automatic.

Compressor

The compressor is switched off by the system when the temperature inside the evaporator reaches values which may lead to the formation of ice since this could effect correct operation of the system.
The compressor switch-off threshold is fixed at 2 °C. The compressor will be switched back on again once a temperature of 4 °C is reached.
The compressor will always be switched on in MAX-DEF condition and will automatically be switched off during normal operation in the following conditions:

- fan off
- HI system status.

An error concerning the frost sensor (short circuit or open circuit) will cause the compressor coupling to be switched off. The compressor will be automatically restarted by the system when normal conditions are restored.
The compressor will be operated in any case for a few seconds every 30 minutes to ensure lubrication also when it is off.

Manual settings

The message MANUAL will appear on the display next to the respective section if manual ventilation or distribution is selected. The meaning of the remaining information will be the same as in automatic operation. The manual recirculation selection is shown by the corresponding status indication.

Ventilation

Manual selection will always have priority over automatic operation. The message MANUAL will appear on the display over the air distribution indication.

Recirculation

Recirculation will be switched on when required by the user by pressing the specific button. The recirculation flap will be opened in any case after thirty consecutive minutes for two minutes and then closed again to let fresh air into the passenger compartment.

Compressor

The compressor will be switched off when the AUTO button is pressed. In this case, the message ECON will appear on the display.
This message will flash if the temperature at the vents required for reaching the requested temperature (set on the display) is lower than the temperature of the air at climate control module intake, indicating that the requested temperature cannot be reached while the compressor is off.

The ECON message will appear fixed if, on the other hand, compressor operation is not needed to reach the required temperature.
The ECON message will disappear when the AUTO button is pressed again to indicate that the compressor is working automatically.
The compressor will be operated in any case for a few seconds every 30 minutes to ensure lubrication also when it is off.

MAX-DEF

MAX-DEF mode (switched on by holding the DEF button pressed for longer than two seconds) is used to demist the windscreen.
The following conditions are established when the function is on:
- compressor on
- DEF air flow distribution
- recirculation open
- maximum fan speed.

The air temperature at the vents is set to the maximum if the outside temperature is lower than 15 °C.
The system will run MAX-DEF mode for five minutes after which it will return to the previous settings.
The transition to the initial status can be controlled by pressing either the TEMP +/-, AIR +/- or air flow distribution buttons.

Temperature display

In normal conditions, the temperatures (outside and required) are shown in degrees Celsius.
The display can be switched to degrees Fahrenheit at any time as follows:
- Hold the outside temperature display request button pressed for approximately six seconds. After this time, the required temperature will be displayed in degrees Fahrenheit and the temperature unit of measure indication will be switched to "E".
- Power down the system by turning the ignition key to OFF.
- Power up the system by turning the ignition key to MAR.

The control unit will display the temperatures (outside and required) in Fahrenheit.
The reverse procedure is possible at any time according to the same method.

CHECKS AND ADJUSTMENTS

Preliminary checks

Check the following fundamental aspects to prevent malfunctioning and to ensure correct system operation.

- Keep the climate control system control unit away from sources of high heat, e.g. in a painting oven (remember that it is good practice to remove all electronic control units from the vehicle in this case).
- Remember to disconnect the negative battery terminal and all the electronic modules before performing electrical welding operations on the vehicle (injection-ignition control unit, coil power modules, climate control system control unit, etc.).
- Do not apply voltage higher than or different from the vehicle battery voltage, e.g. when jump starting using an auxiliary battery make sure than the voltage is the same and the connection polarity is correct.
- Always respect maximum cleanliness during coolant circuit maintenance operations. This is because particles of dirt could obstruct the coolant passage through the expansion valve and cause poor system operation.
- Store dehydrating filters in a dry place to ensure long life.
- Regularly check the conditions, alignment and tension of the compressor drive belt. Furthermore, check the compressor oil level.
- Make sure that there are no leaks from the heating or air conditioning system. Check that the system is charged with at least 850/900 grams of specified fluid.
- Check that the electrical connections of the various components and the system wiring are in good condition (sensors, climate control system control unit, compressor, etc.).

System draining and refilling

This system employs R134a coolant (tetra-fluoride-ethane) which is classified as an environmental-friendly substance by the legislation in force. Never use this coolant in systems operating with the previous R12 fluid (Freon 12).
For reasons of incompatibility between compressor oil and coolant, R12 cannot be used in systems designed to run on R134a.

Use the fitting on the compressor intake tube to drain the system.
Connect the system to a specific device for collecting the coolant. Make sure the room is well ventilated and without any naked flames.
Drain the system slowly to prevent the formation of ice inside the expansion valve and oil leakage from the compressor.

Always make sure that the coolant has been drained and collected in a suitable device before disconnecting any line.

Do not dispose of R134a directly into the atmosphere. Despite the fact that the ozone depletion potential of the substance is equal to zero, it does have a potential global warming factor. For this reason, collection and recycling are subject to legal controls.

Always use type-approved coolant collection/recycling devices to capture the coolant drained from the air conditioning system. Do not mix different coolants in the same device.

Always wear protective goggles and gloves when working on air conditioning systems and compressors.
After draining the system completely, bleed the air from the coolant charging cylinder and system.
A vacuum of approximately 0.5 - 0.6 bars in the system is required according to the device used.
Check system tightness for at least 15 minutes after eliminating all the air from the system.
If the system is not airtight, fill with approximately 500 grams of coolant and locate the leak.

Add a small amount of fluorescent fluid to the coolant to facilitate leak location. The presence of the leak will appear under the light of specific leak locating lamps.

Do not use naked flames to locate leaks. A particularly hazardous gas (phosgene) could be formed.

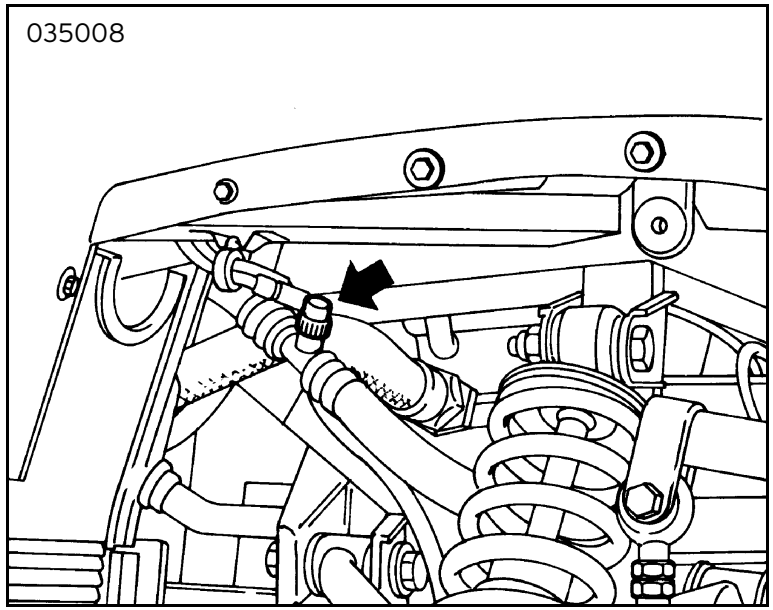

Fig. 3 - Low pressure circuit valve

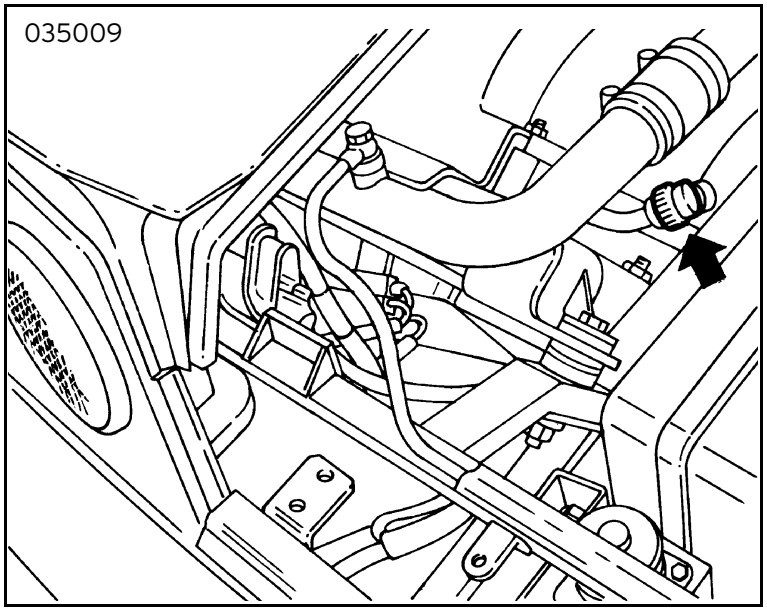

Fig. 4 - High pressure circuit valve

Refill the circuit after checking tightness. Use approximately 850/900 grams of specific fluid.
To fill the system, start up the engine, select minimum temperature on the control panel and check that the control unit activates the compressor electromagnetic coupling.
Once filled, let the system run for approximately 10 - 15 minutes. Check that the coolant passes through the dehydrating filter in liquid state.

Compressor oil level check
To check the oil level in the compressor, lay it horizontally, remove the cap and check that the oil is level with the filling hole. Top up with oil of the specified type, if required.

First running - RESET
The climate control system control unit will run a procedure to identify the system where it is fitted the first time it is switched on. For this reason, the RESET procedure must be run whenever a control unit is connected to a different system from where it was first used.
Turn the ignition switch to ON and press the AUTO button at the same time to run the RESET procedure.
Letter I will firstly appear along with the basic control symbol followed by letter B during the procedure.
At the end of the procedure, the control unit will switch to automatic operation. The temperature will be set to 23 °C.
The system will be ready to work from this point.

DIAGNOSTICS

Self-diagnostic procedure
The control unit continuously tests the operation of the various components in the system to ascertain good operation at all times. An error code will appear on the display along with the required temperature if a faulty component is found. The error codes and their respective meaning are shown in the following table (hexadecimal codes):

CODE	MEANING
E0	TA sensor (open circuit)
E1	TT1 sensor (open circuit)
E2	TT2 sensor (open circuit)
E3	TSAB sensor (open circuit)
E4	TE sensor (open circuit)
E5	TA sensor (short circuit)
E6	TT1 sensor (short circuit)
E7	TT2 sensor (short circuit)
E8	TSAB sensor (short circuit)
E9	TE sensor (short circuit)
EA	Mixer blocked during identification procedure
EB	Reversed mixer power lines
EC	IRR sensor (open circuit)
ED	IRR sensor (short circuit)
EE	Fan speed regulator overheat

The abbreviations have the following meanings:
TT1: Upper vent outlet temperature
TT2: Lower vent outlet temperature
TA: Passenger compartment temperature
TE: Outside temperature
TR: Required temperature (set on display)
TSAB: Frost sensor temperature
IRR: Solar irradiation

Normal operation will be restored when the error disappears.

Recovery strategies
The system implements a set of recovery programs to ensure acceptable system operation when one of the aforesaid error conditions occur. Specifically:
- TA sensor error: TA = TR is set.
- TE sensor error: TE = TA is set.
- TT1, TT2 sensor error: the target temperature calculation method is changed.
- TSAB error: the compressor is switched off.
- IRR error: average solar radiation is considered.

There are no recovery strategies for actuator drive errors.

User diagnostics
The system offers the possibility of running a set of diagnostic tests by means of special button combinations without the use of specific diagnostic tools.

Starting

User diagnostics is started by turning the ignition switch to MAR and holding the RECIRCULATION button pressed at the same time.

Quitting

Turn the ignition switch to OFF. The engine identification procedure will be started when the switch is turned to MAR again.
User diagnostics presents a sequence of four diagnostic statuses:

- display test status
- button test status
- sensor test status
- actuator test status

The test status sequence is determined by the control unit and cannot be changed by the user.

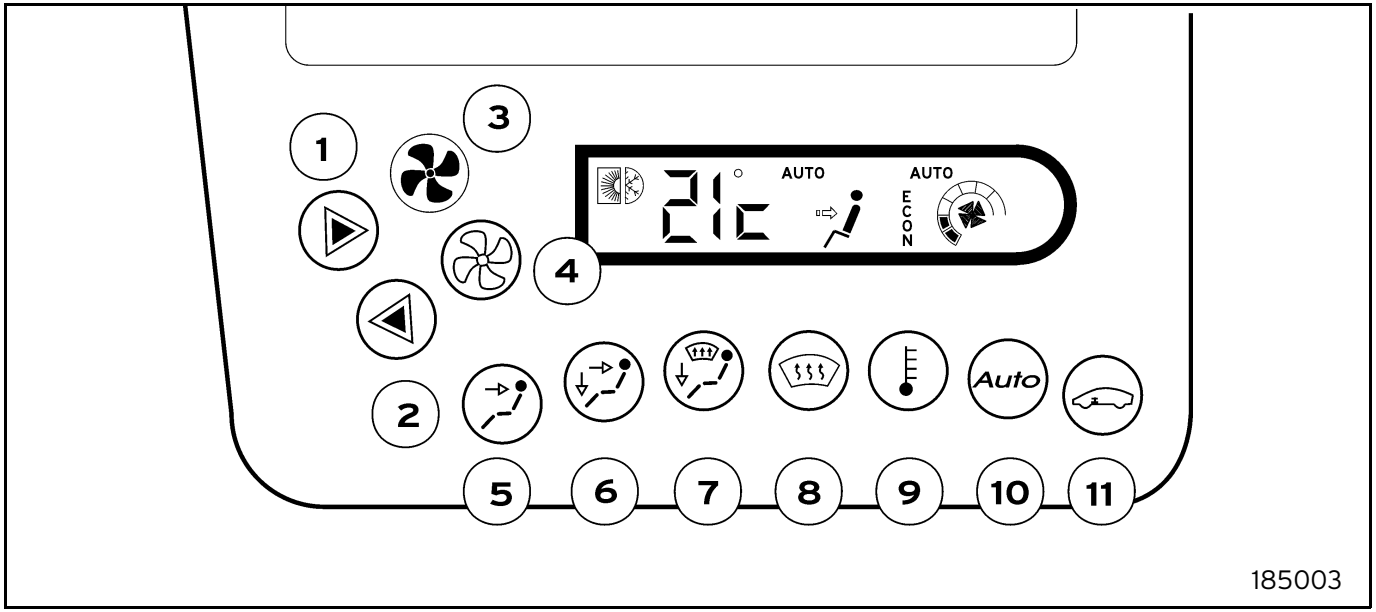

1 TEMP + button
2 TEMP - button
3 AIR + button
4 AIR - button
5 VENT button
6 BI-LEVEL button
7 HEAT button
8 DEFROST button
9 TEXT button
10 AUTO button
11 RECIRCULATION button

Fig. 5 - Climate control system control panel

Display test

Turn the ignition switch to MAR. A first portion of the display will light up for a few seconds, followed by a second portion and then the entire device to test operation.
The display will go out after a few seconds and the first fan speed indication will light up to indicate that the test is done.

- Press the AIR + button to go to the button test.

Button test

The second fan speed indication will light up to indicate that this phase has started.
During this part of the diagnostic test procedure, a numeric code will appear on the display each time a button is pressed. Correspondence between buttons and codes is shown in the table below.
The button will be faulty if no code appears.

BUTTON	CODE
TEMP +	10
TEMP -	7
AIR +	4
AIR -	1
VENT	11
BI-LEVEL	8
HEAT	5
DEFROST	2
TEXT	9
AUTO	6
RECIRCULATION	3

⚠ Check all buttons in any order to go to the next test.

- Press AIR - to go back to the display test.
- Press AIR + to go to the sensor test.

Sensor test

The third fan speed indication will light up to indicate that this phase has started.
During this part of the diagnostic test procedure, the values output by each selected sensor will appear on the display each time a button is pressed. Correspondence between sensors and buttons is shown in the table below.

TESTED SENSOR	BUTTON TO BE PRESSED
Passenger compartment temperature (TA)	TEMP +
Outside temperature (TE)	TEMP –
Upper vent outlet temperature (TT1)	VENT
Lower vent outlet temperature (TT2)	BILEVEL
Solar irradiation (IRR)	DEFROST
Frost sensor temperature (TSAB)	HEAT

The temperature will be expressed either in degrees Celsius or degrees Fahrenheit according to the setting made before the diagnostic test procedure was run.

The solar irradiation sensor reading shown is a percentage of the supposed maximum value of 1000W/m^2, approximately corresponding to summer irradiation in southern European latitudes.

- Press AIR - to go back to the button test.
- Press AIR + to go to the actuator test.

Actuator, compressor and fan test

The fourth fan speed indication will light up to indicate that this phase has started.
During this part of the diagnostic test procedure, the position of each selected actuator will appear each time a button is pressed.
Correspondence between actuators and buttons is shown in the table below.

TESTED ACTUATOR	BUTTON TO BE PRESSED
Mixer	VENT
Recirculation	BI-LEVEL
Compressor	HEAT
Fan	DEFROST
FLOOR flap motor	TEXT
VENT flap motor	RECIRCULATION
DEFROST flap motor	AUTO

⚠ Press TEMP + and TEMP - to operate the selected actuator in the required direction.

- Press AIR - to go back to the sensor test.
- Press AIR + to go to the display test.