28 - REAR DIFFERENTIAL

CONTENTS

DESCRIPTION P. 3

SPECIFICATIONS AND DATA P. 4
Tightening torque table

RULES AND OPERATIVE PRECAUTIONS P. 5

REMOVAL AND REFITTING P. 6
Removal
Refitting

DISASSEMBLY P. 7
Differential
Drive input pinion and shaft

DIFFERENTIAL DISASSEMBLY P. 16

CHECKS P. 18

DIFFERENTIAL ASSEMBLY P. 19

ASSEMBLY P. 20
Bearing race assembly
Crown bearing pre-load determination
Pinion assembly
Pinion-crown clearance adjustment
Drive input shaft assembly
Final assembly

INSPECTIONS AND ADJUSTMENTS P. 38
Oil change
Vehicle-fitted pinion-crown coupling check
Vehicle-fitted axle shaft flange seal replacement

DESCRIPTION

The rear differential is driven by the shaft passing inside the engine crankcase. It is a partially self-locking type.

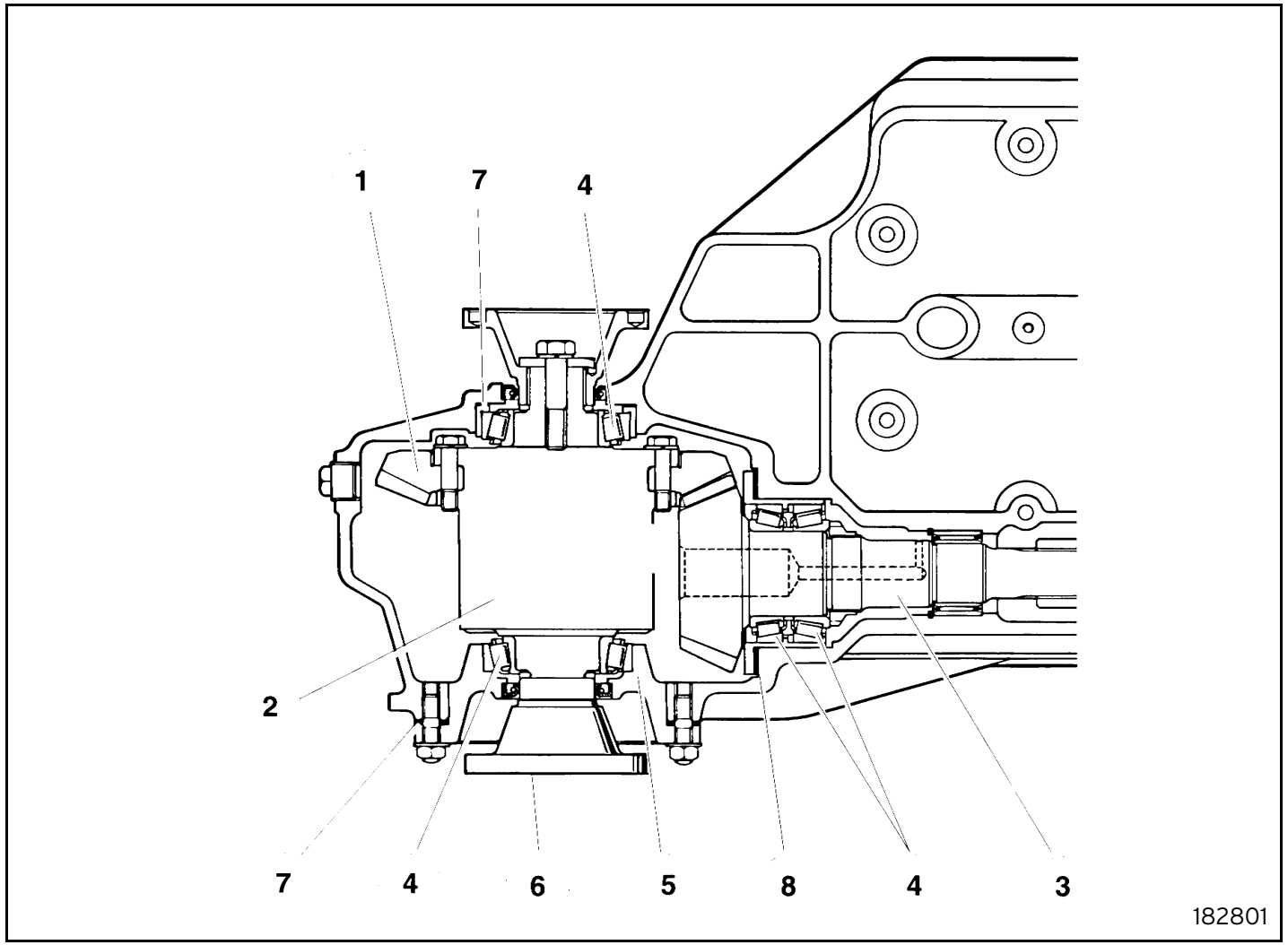

1 Crown
2 Differential
3 Pinion
4 Roller bearing
5 Differential flange
6 Axle shaft flange
7 Crown adjustment shims
8 Pinion adjustment shims

Fig. 1 - Differential section

SPECIFICATIONS AND DATA

Reduction crown wheel and pinion	Hypoid
Reduction ratio	2.412
Self-locking percentage	45%
Type of bearing	Taper roller
Pre-load adjustment	With spacer washers
Crown bearings pre-load: rolling torque	24 ± 1 daNm
Pinion-crown coupling clearance (mm)	0.15 ± 0.20

Tightening torque table

Part	Tightening torque [Nm]	Page reference
Axle shaft flange screws	69.0	6
Crown wheel screws	102.0	19
Differential carrier nuts	50.0	22 - 34
Bearing pre-load flange nuts	40.0	23 - 40
Pinion flange screws	30.0	27 - 29
Axle shaft flange screw	91.4	37 - 40

RULES AND OPERATIVE PRECAUTIONS

WARNING

- All operations must be carried out with the utmost care to avoid injury to persons.
- Specific tools are required for certain procedures. The use of these tools is essential to ensure safe operation.
- Follow the safety rules in force in the workshop. Specific warnings are provided in the manual where precautions are required to prevent hazardous situations.
- Scrupulously follow the instructions shown on the manufacturer's safety data sheet that the supplier is required to hand over to the user when employing chemical products.

CAUTION

- All operations must be carried out with the utmost care to avoid damage to components.
- Use a thickness gauge with a minimum precision of 1/100 mm for measuring.
- Loosen ferrous parts that are stuck together by knocking lightly with an aluminium or lead mallet. Use a resin or wood mallet for light alloy parts.
- During disassembly, check that reference marks are on the required parts.
- When refitting, lubricate the required parts to prevent seizing during initial operation.
- When refitting, it is essential to respect tightening torques and setting data.
- Replace seals, washers, snap rings, safety plates, lock nuts, caulked edge nuts and all other deteriorated parts when refitting.
- Use Loctite/Arexons 518 or Loctite/Arexons 641 as instructed when refitting.
- Use Loctite/Arexons medium thread adhesive 52A42 or Loctite/Arexons strong 52A70 when refitting.

NOTE

This symbol indicates important information.

REMOVAL AND REFITTING

The following overhauling procedures can only be completely carried out after removing the power train from the vehicle. This is because the complete rear differential can be removed from the power train and the assembly can be overhauled after removing the oil sump.
The rear differential overhaul procedures described below - with the exception of the operations concerning the drive input shaft - can also be carried out without removing the power train. In the latter case, carry out the removal sequences shown to reach the assembly cover and flanges.

Removal
Proceed as follows:
- Take the vehicle to a shop jack.
- Remove the axle shaft boot heat guard on both sides.
- Remove the drive output flange axle shaft on both sides.
- Remove the alternator.
- Remove the tailpipes.
- Remove the rear mount.
- Drain the engine oil sump.
- Remove the various parts according to the procedures given below.

Refitting
Refit by reversing the removal sequence. Specifically:
- Fit the axle shaft on both sides to the drive output flange and fasten the screws at the specified tightening torque:

axle shaft flange screws: 69.0 Nm

DISASSEMBLY

Differential

Proceed as follows:

- Fit the assembly on a mount (figure 2) using adequate fastening brackets.

Use suitable tools for handling the assembly. Make sure that the assembly is correctly fastened and stable to prevent it from tipping over or falling.

- Loosen the axle shaft flange fastening screw (figure 3). Repeat the operation on the other side.

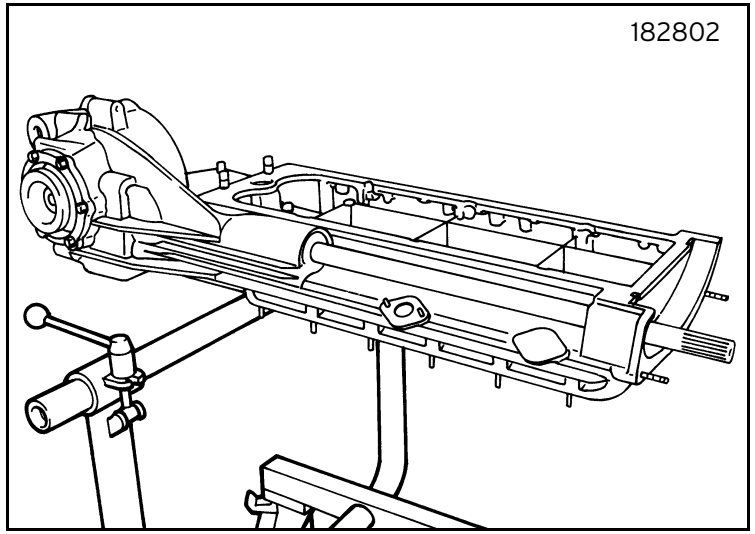

Fig. 2

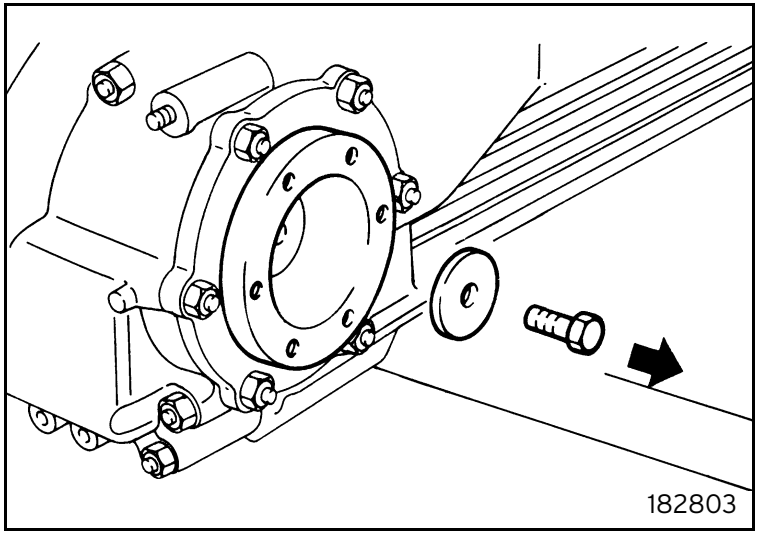

Fig. 3

- Use a suitable puller and shim to remove the flange (figure 4). Repeat the operation on the other side.
- Remove the seal (figure 5). Repeat the operation on the other side.

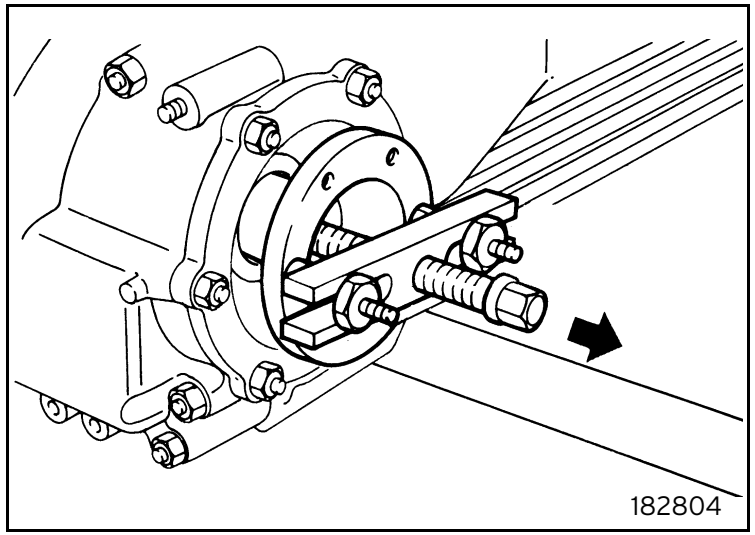

Fig. 4

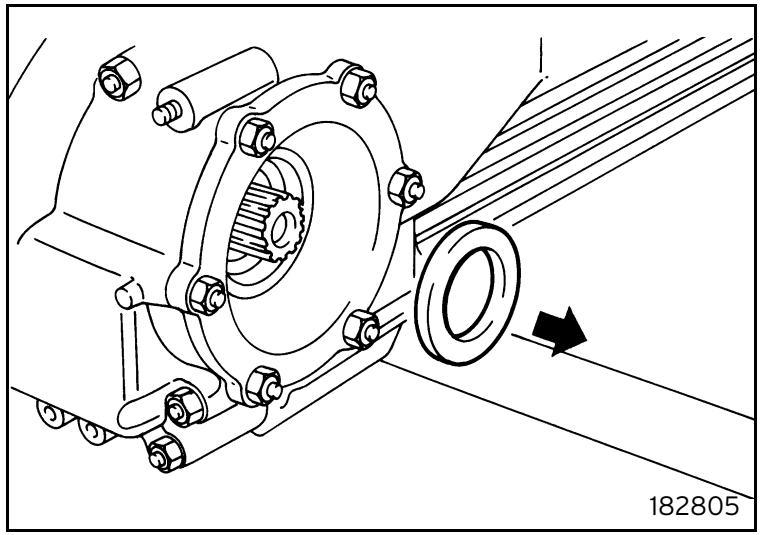

Fig. 5

- Loosen the fastening nuts and remove the bearing pre-load flange with the respective adjustment shims (figure 6).
- Loosen the fastening nuts and remove the differential carrier cover (figure 7).

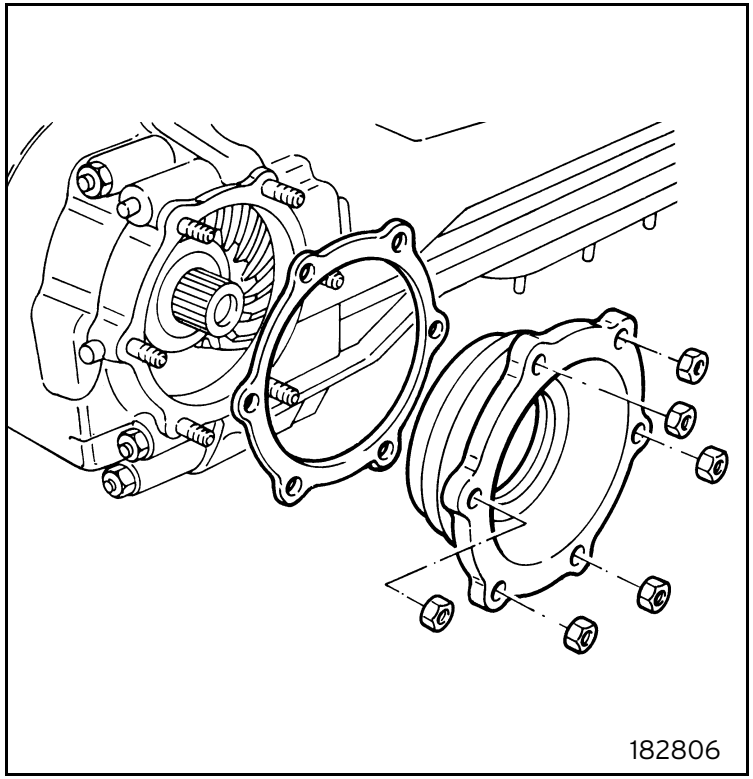

Fig. 6

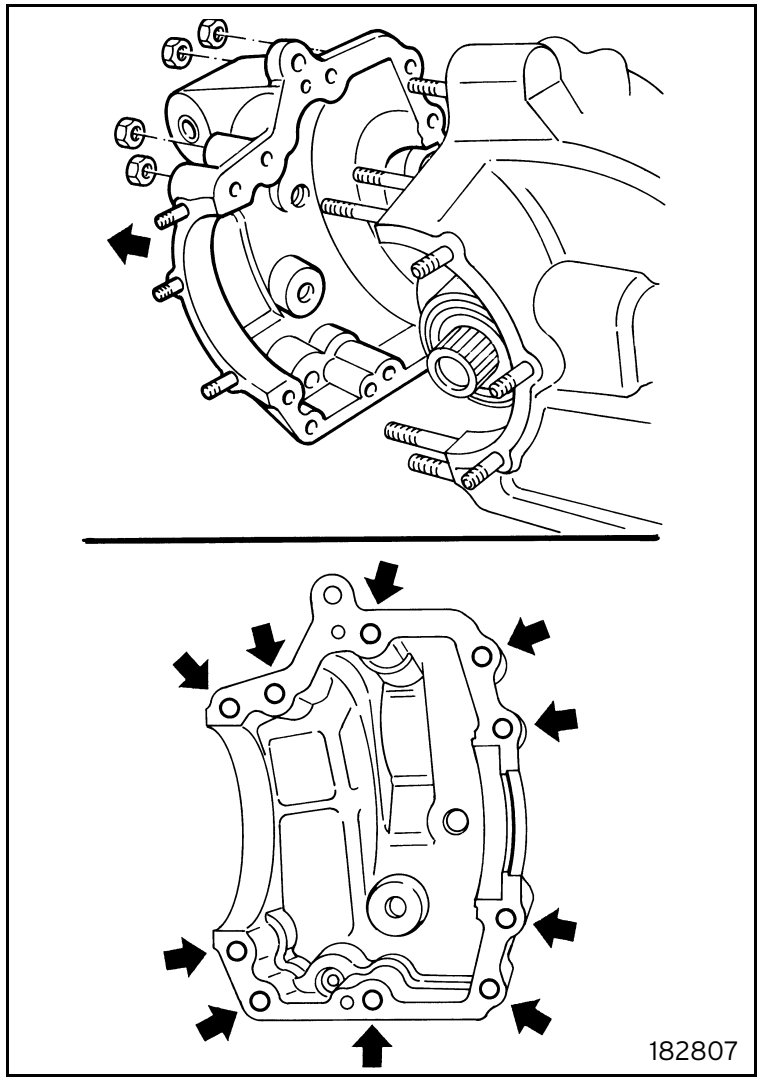

Fig. 7

- Remove the crown-planet gear set (figure 8).
- Remove the roller bearing outer race seat with respective adjustment shims (figure 9).

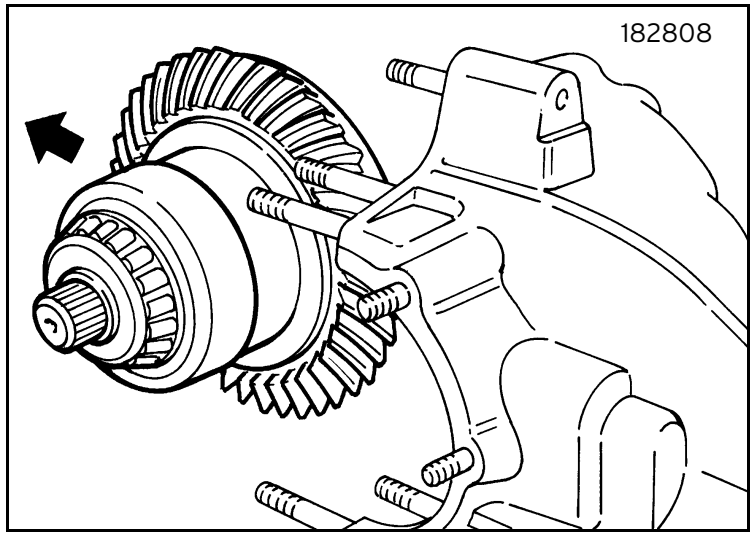

Fig. 8

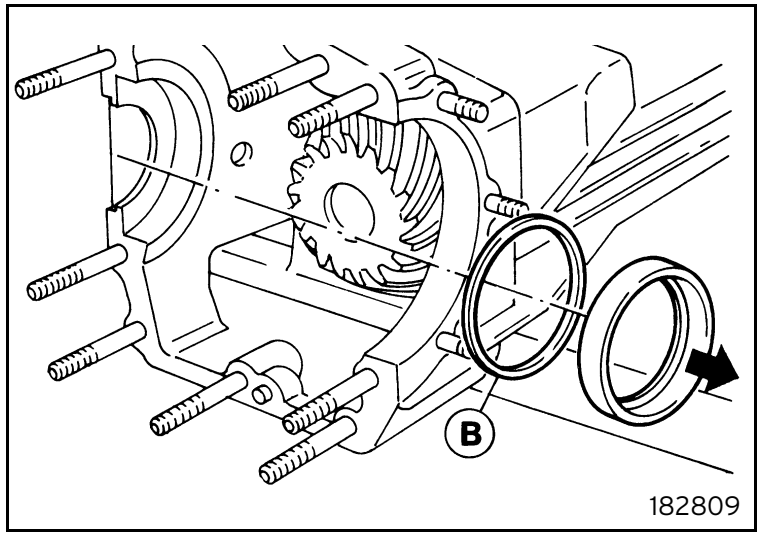

Fig. 9

- Warm up the bearing pre-load flange with a blowpipe to remove the roller bearing outer race (figure 10).
- Warm up the bearing seat on crown side with a blowpipe to remove the roller bearing outer race (figure 11).

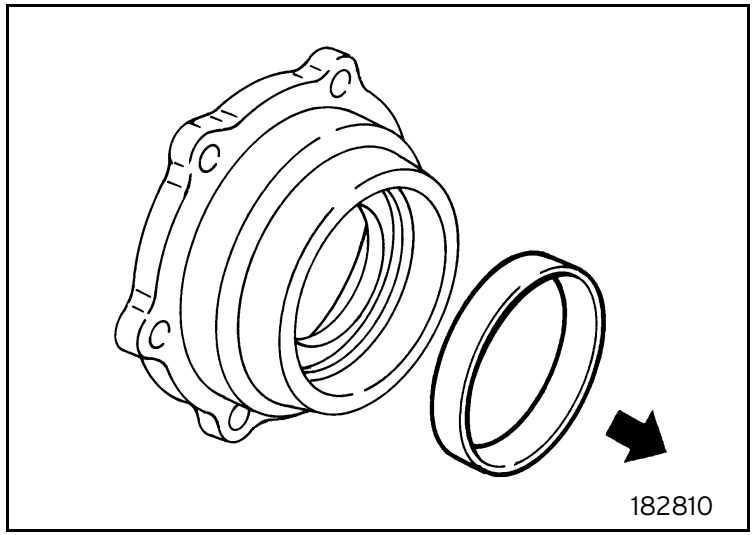

Fig. 10

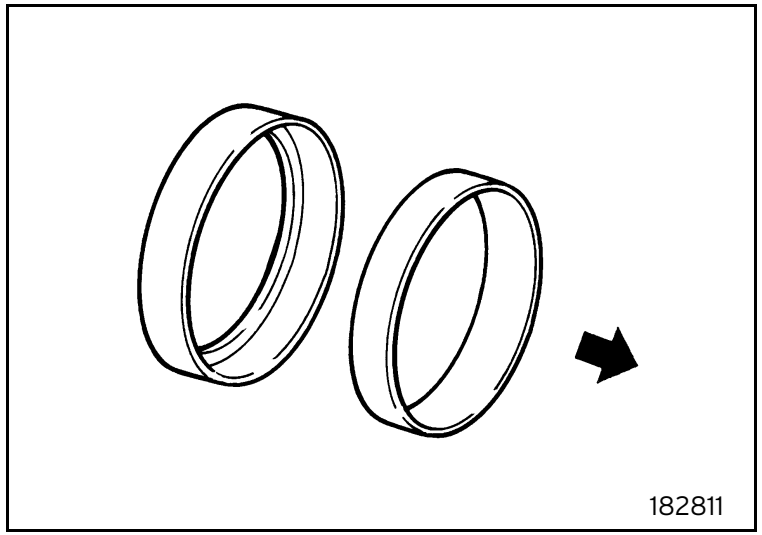

Fig. 11

Drive input pinion and shaft
Remove as follows:
- Loosen the fastening screws and remove the pinion flange with pinion, bearings and adjustment shims C (figure 12).

The pinion is supplied fitted on a specific flange with pre-loaded bearings. The bearings should not be disassembled. Replace the pinion and bearings in the event of a failure.

- Remove the snap ring and use a suitable block to remove the roller bearing (figure 13).

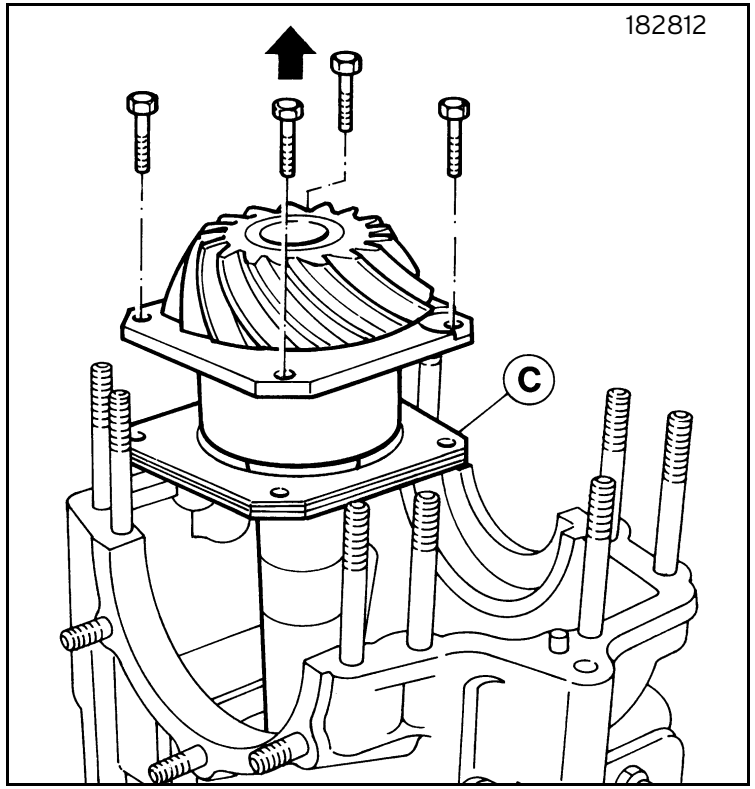

Fig. 12

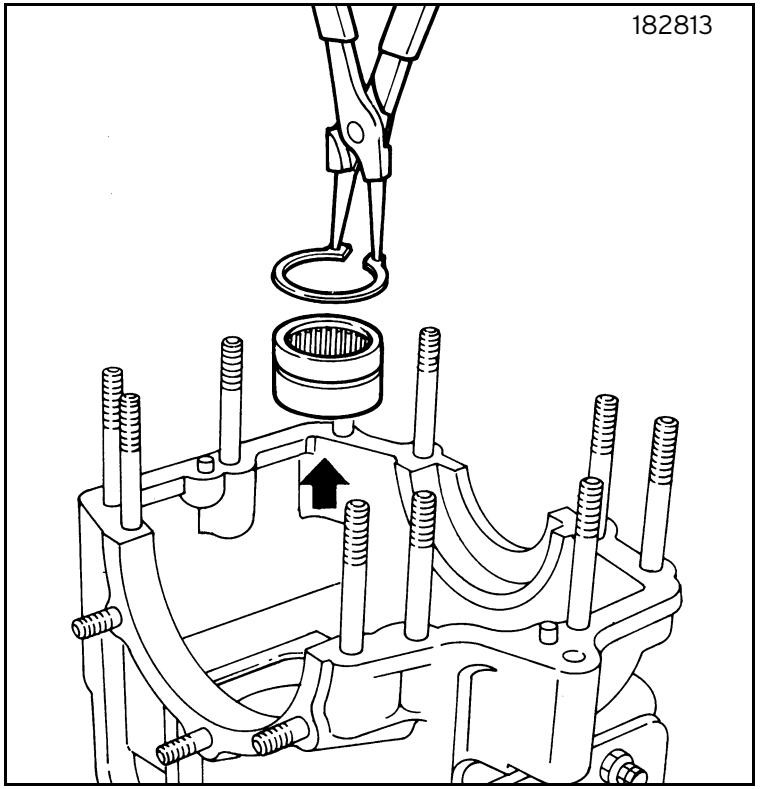

Fig. 13

- Working from the other side. remove the first drive input shaft front bearing snap ring (figure 14).
- Using a ram, remove the shaft and bearing (figure 15).

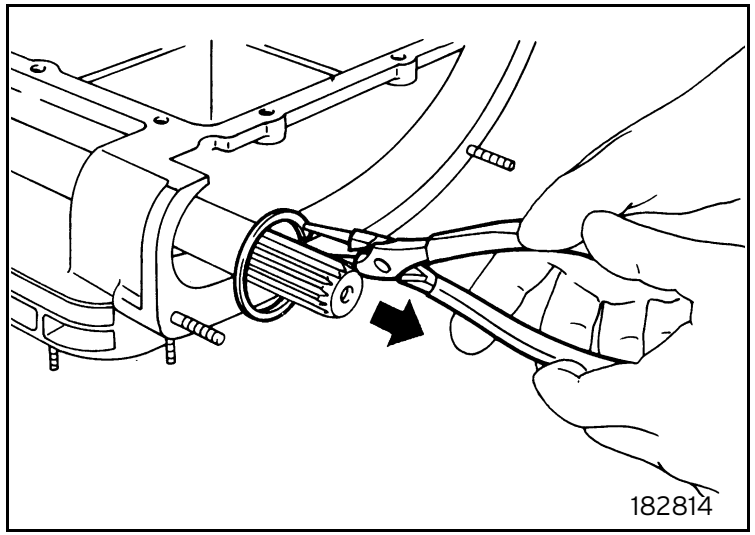

Fig. 14

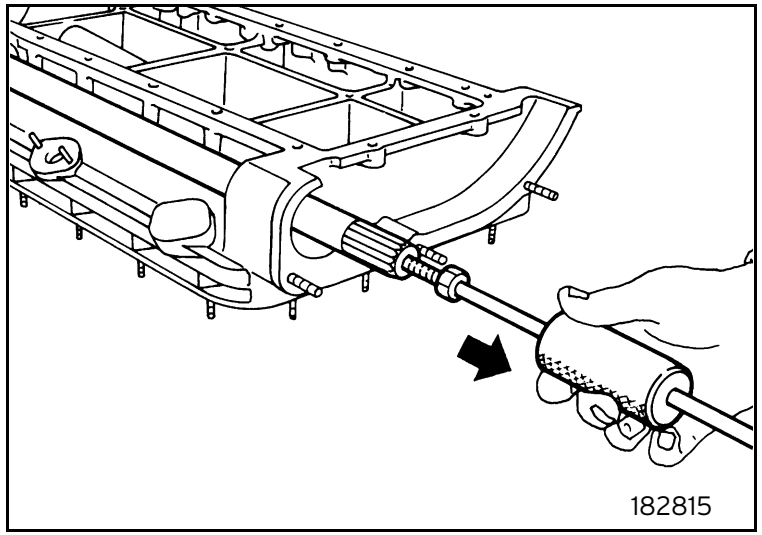

Fig. 15

- Remove the bearing from the shaft (figure 16).
- Remove the second drive input shaft front bearing snap ring (figure 17).

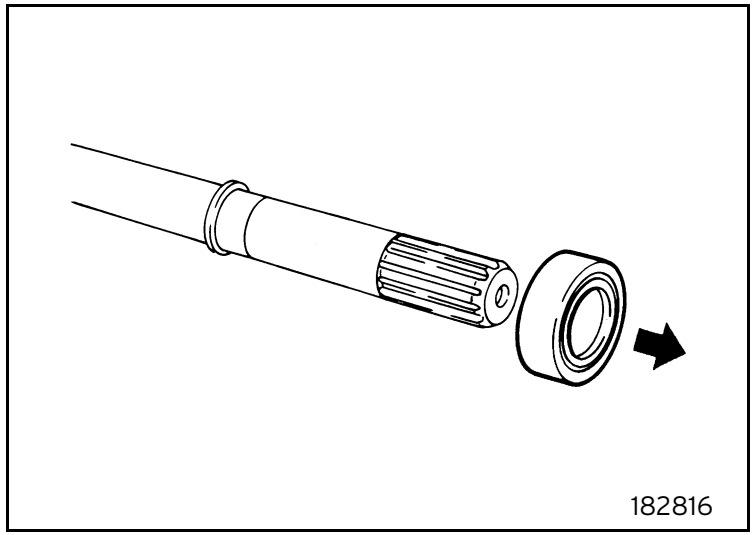

Fig. 16

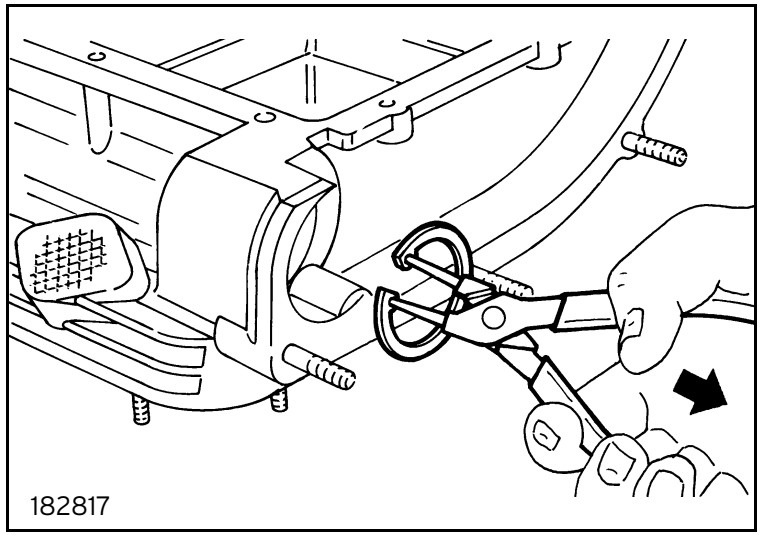

Fig. 17

- Remove the drive input shaft seal (figure 18).
- Remove the drive input shaft rear bearing (figure 19).

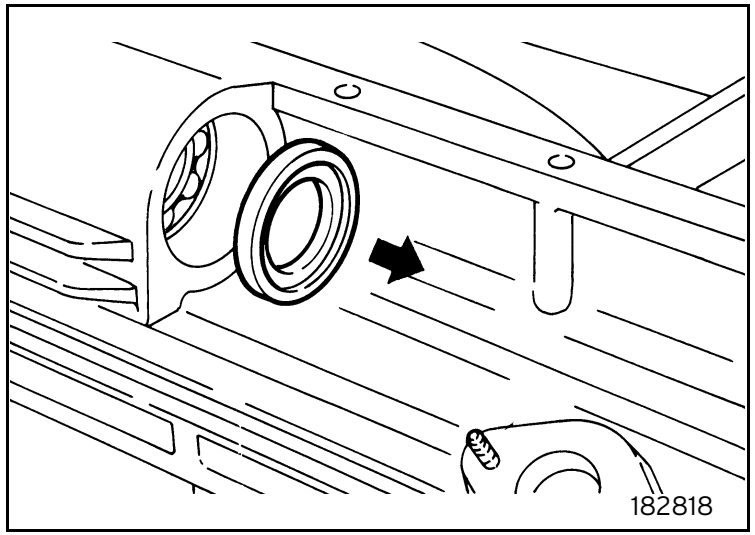

Fig. 18

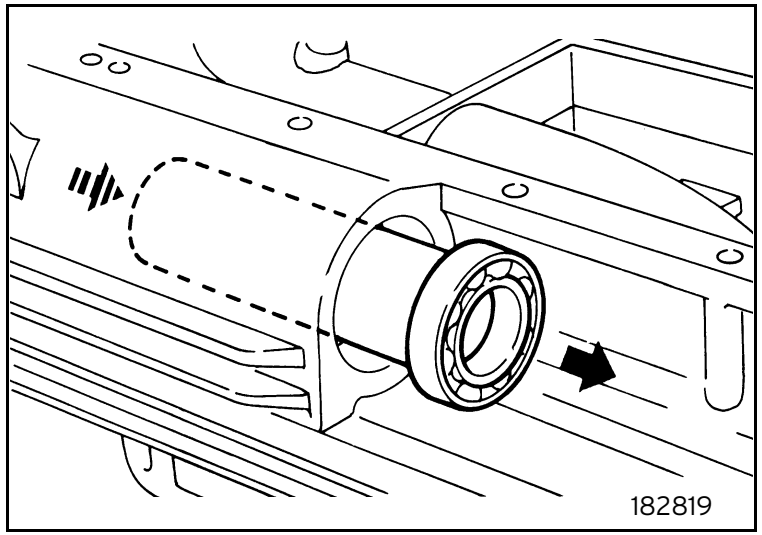

Fig. 19

DIFFERENTIAL DISASSEMBLY

Proceed as follows:

- Using a suitable puller and shim, remove the roller bearing (figure 20). Repeat the operation on the other side.
- Loosen the fastening screws and remove the crown-flange-planet gear from the planet gear set (figure 21).
- Disassemble the crown, the planet gears, the self-locking device plates and the planet gear set.

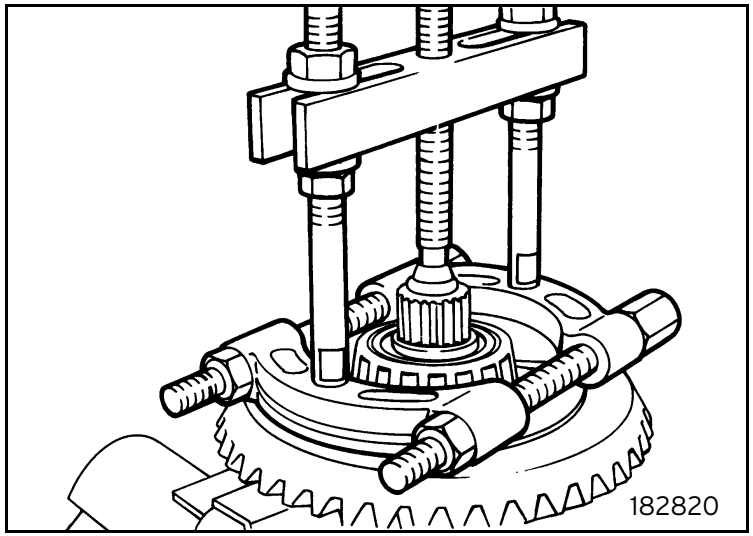

Fig. 20

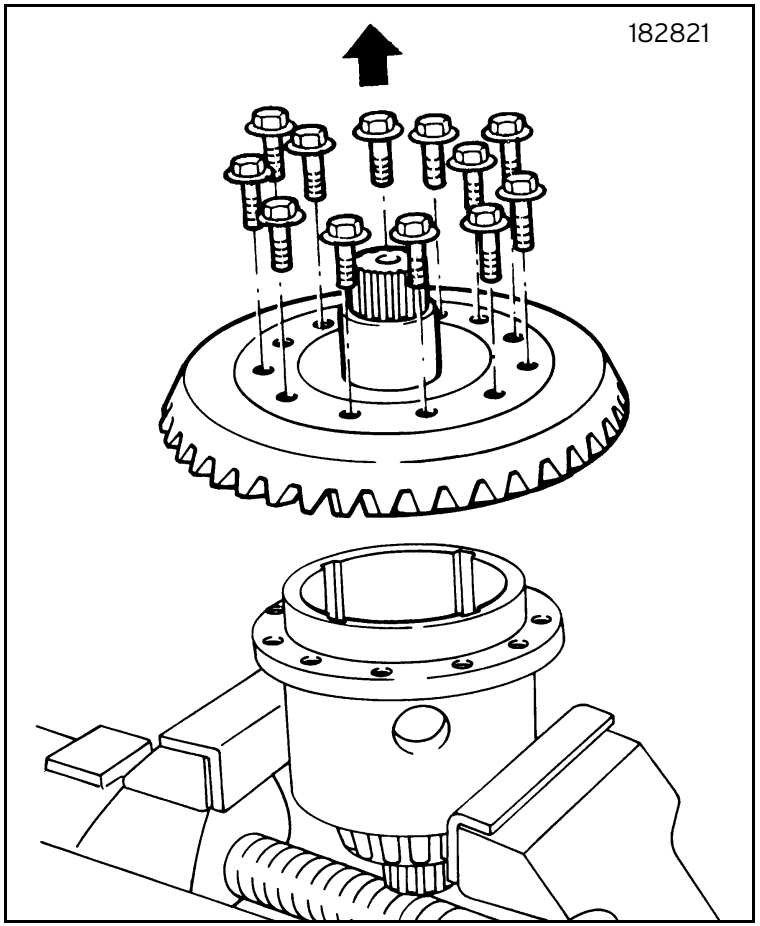

Fig. 21

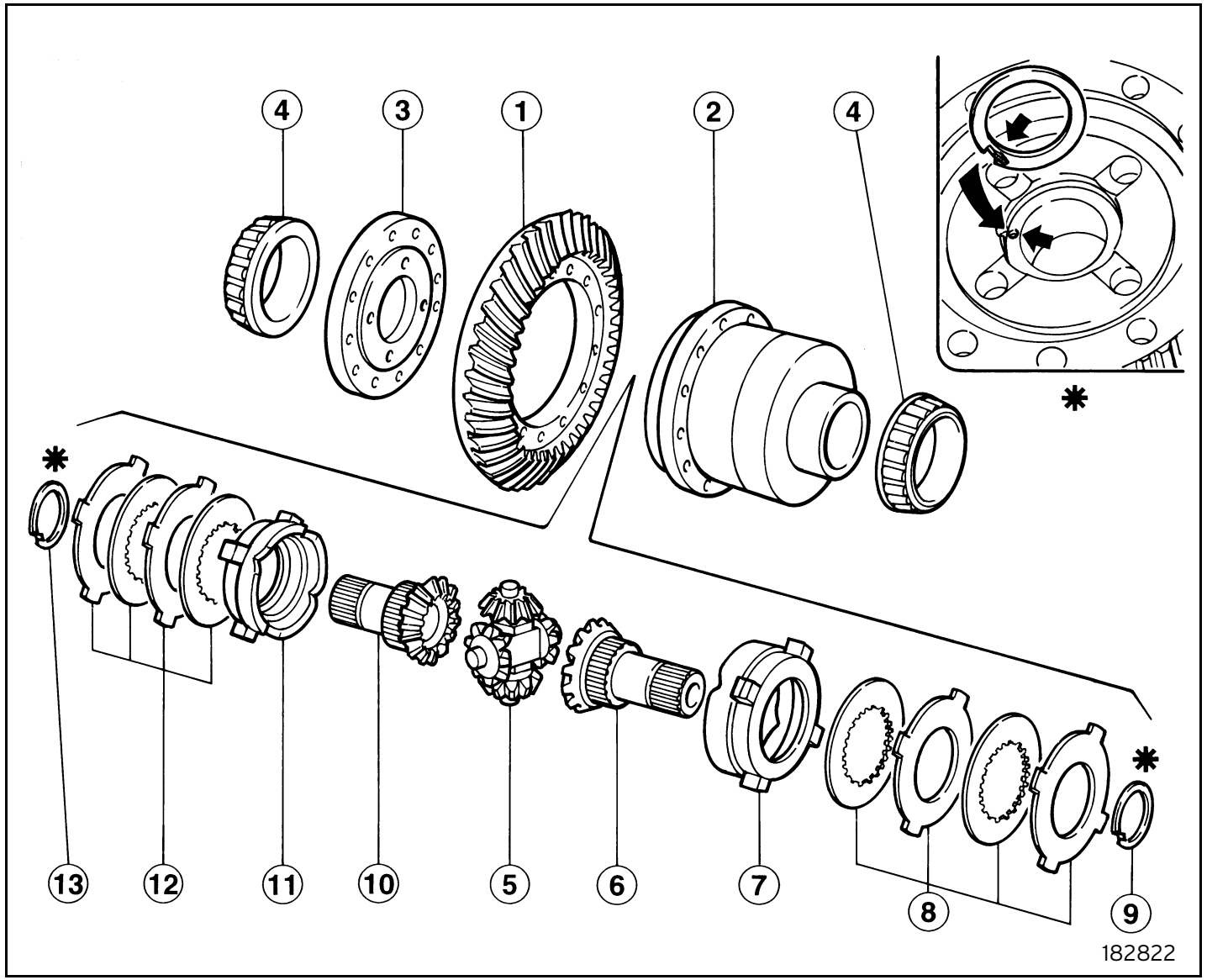

Fig. 22

1 Crown
2 Planet gear set box
3 Crown flange
4 Taper roller bearing
5 Planet gear set shaft and gears
6 Crown wheel
7 Thrust plate
8 Self-locking device plates
9 Ring
10 Crown wheel
11 Thrust plate
12 Self-locking device plates
13 Ring

CHECKS

Always replace the respective crown or pinion (with bearings) after replacing the pinion or crown.

Proceed as follows:
- Accurately clean all components.
- Check that the gear tooth profile surfaces are not cracked or scratched and that the side surfaces are not worn or grooved.
- Check that the bearings are in good condition, without traces of overheating. Check that the races, the turning parts or the cages are not damaged.
- Check that the self-locking device plates are not worn or scratched.
- Check that the threading and the grooved profiles are not dented or scratched.
- Check that the cover and flange union surfaces are intact and that the castings are not dented or show signs of cracking.

DIFFERENTIAL ASSEMBLY

- Reassemble the differential carrier as follows (see reference in figure 22):
  - Fit the crown wheel (6) in the planet gear set box (2).
  - Fit the ring (9) on the crown wheel by inserting the tong in the groove (detail).
  - Fit the thrust plate (7) and the self-locking device plates (8) in the planet gear set box in the order shown.
  - Assemble the planet gear set (5) and fit it in the planet gear set box (2).
  - Fit the thrust plate (11) and the self-locking device plates (12) in the planet gear set box (2) in the order shown.
  - Fit the crown (1) on the flange (3), fit the crown wheel (10) on the crown and then fit the ring (13) on the crown wheel by engaging the tong in the groove (detail).
  - Fit the crown with crown wheel in the planet gear set box (figure 23).
  - Fasten the screws in a criss-cross fashion at the specified tightening torque (figure 24):

crown screws: 102.0 Nm

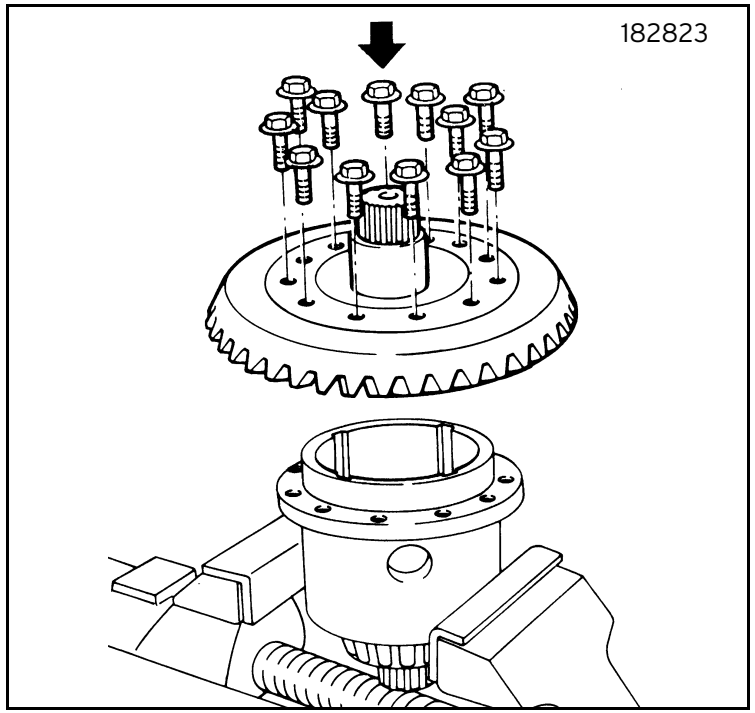

Fig. 23

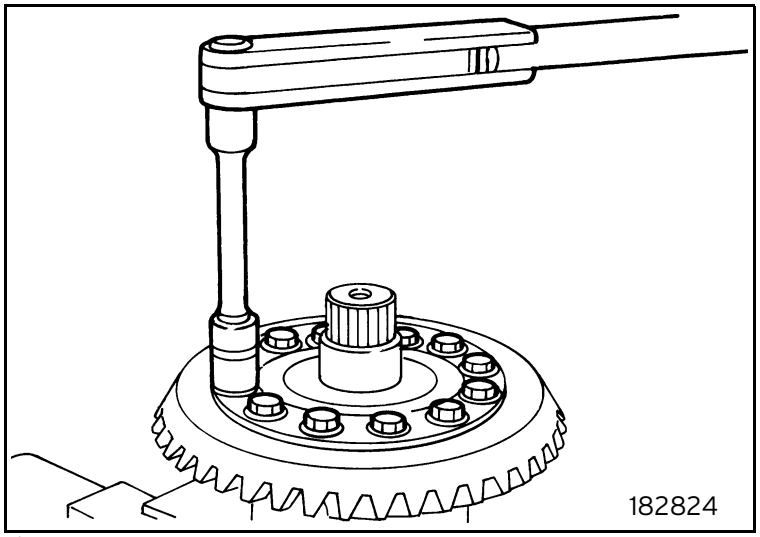

Fig. 24

- Use a suitable block to fit the roller bearing (figure 25). Repeat the operation of the other side.

ASSEMBLY

Bearing race assembly
Proceed as follows:
- Warm up the bearing pre-load flange with a blowpipe and fit the roller bearing outer race (figure 26).

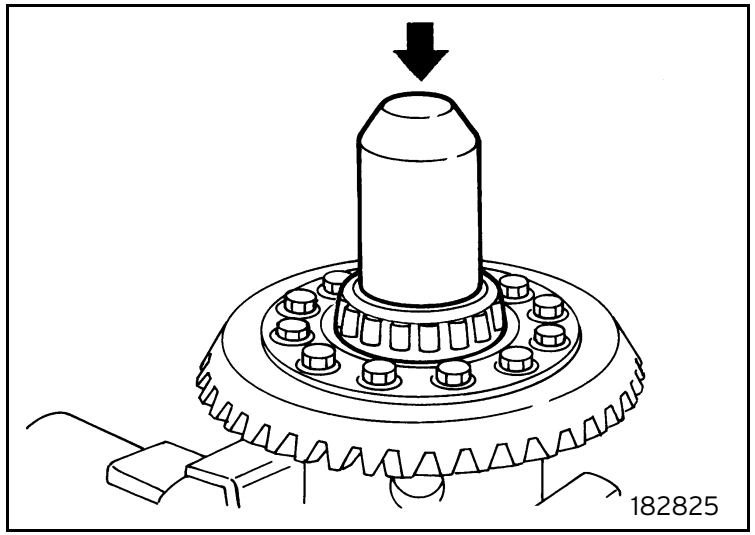

Fig. 25

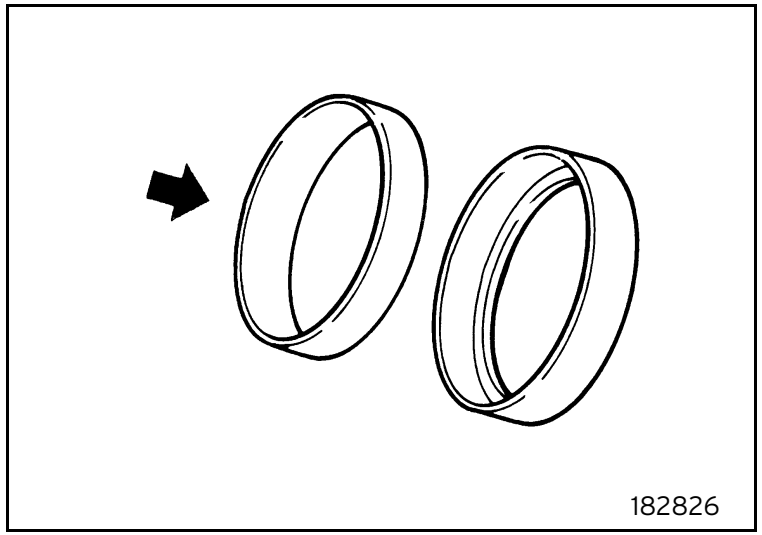

Fig. 26

- Warm up the bearing seat on crown side with a blowpipe and fit the roller bearing outer ring (figure 27).

Crown bearing pre-load determination
Proceed as follows:
- Fit the specified tentative adjustment shims B:

tentative adjustment shim B: s B = 1.30 mm

- Fit the roller bearing outer ring seat (figure 28).

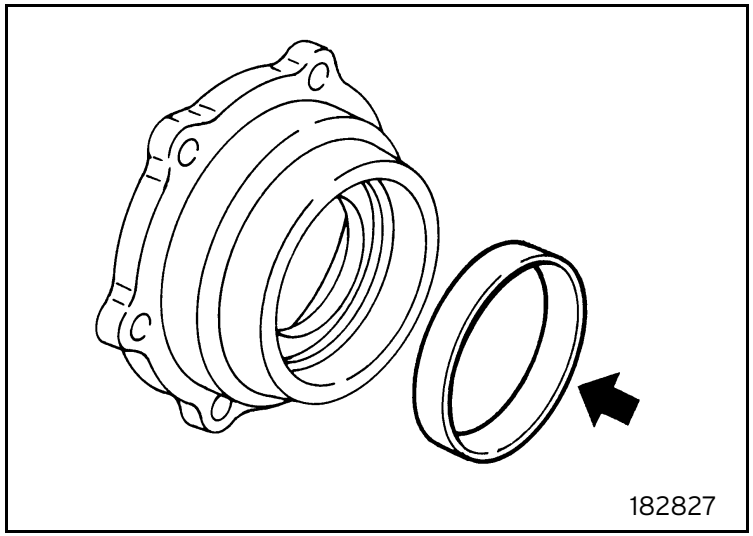

Fig. 27

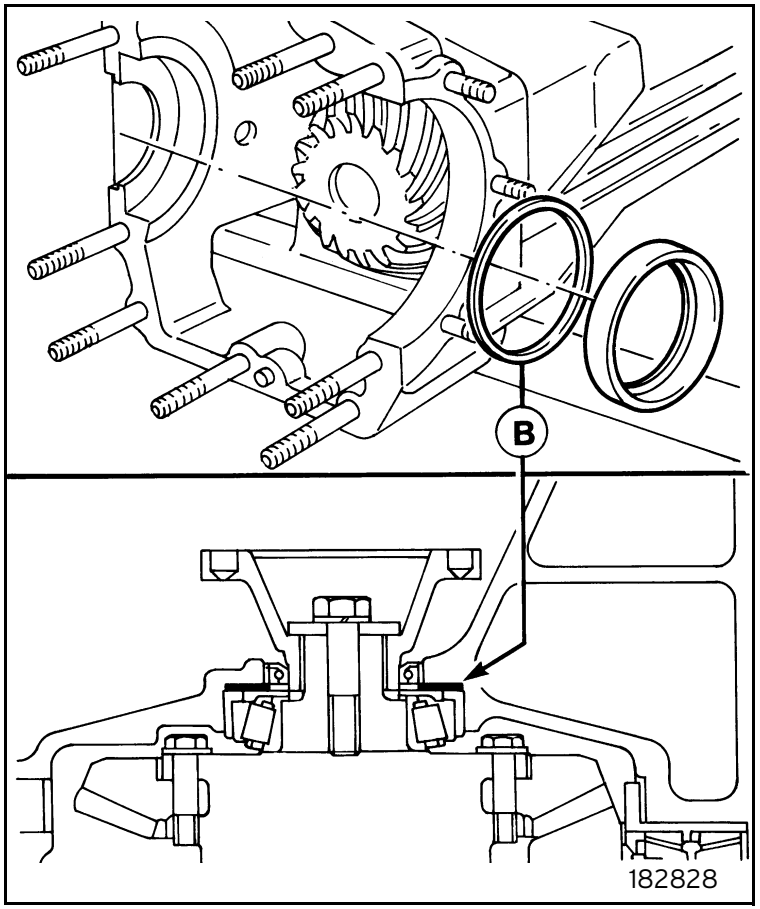

Fig. 28

- Use a suitable shim to stop the planet gears from turning (detail). Then arrange the differential assembly (figure 29).
- Fit the differential carrier cover, lubricate with Molycote 1000 and fasten the nuts at the specified tightening torque (figure 30):

differential carrier nuts: 50.0 Nm

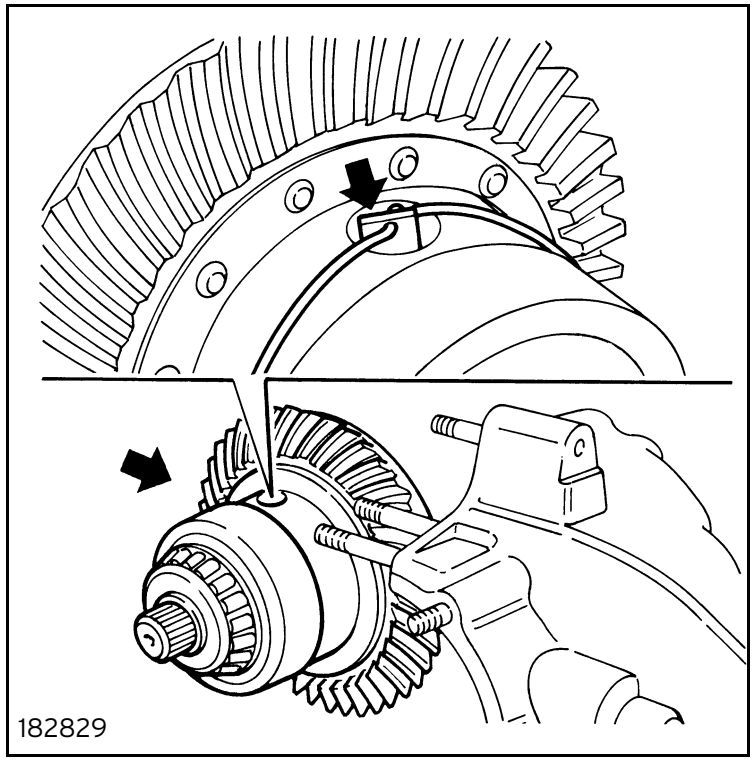

Fig. 29

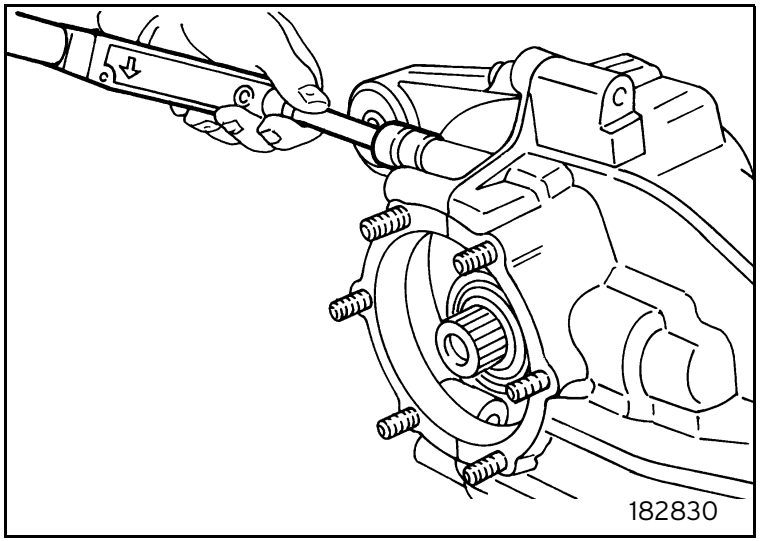

Fig. 30

- Fit the specified tentative adjustment shims A (figure 31):

tentative adjustment shim A: s A = 1.4 mm

- Fit the bearing pre-load flange, lubricate with Molycote 1000 and fasten the nuts at the specified tightening torque (figure 32):

bearing pre-load flange nuts: 40.0 Nm

Direct the flange so that the reference signs coincide (detail).

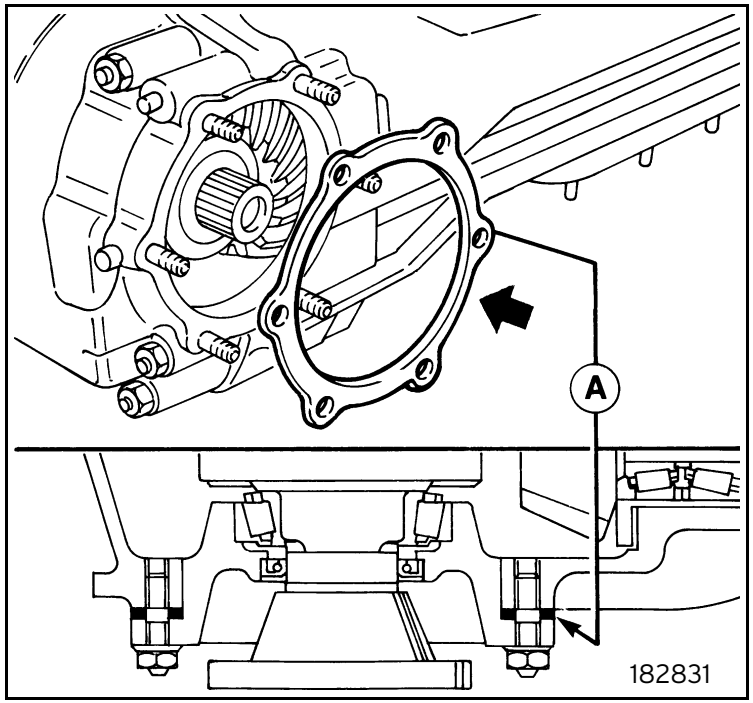

Fig. 31

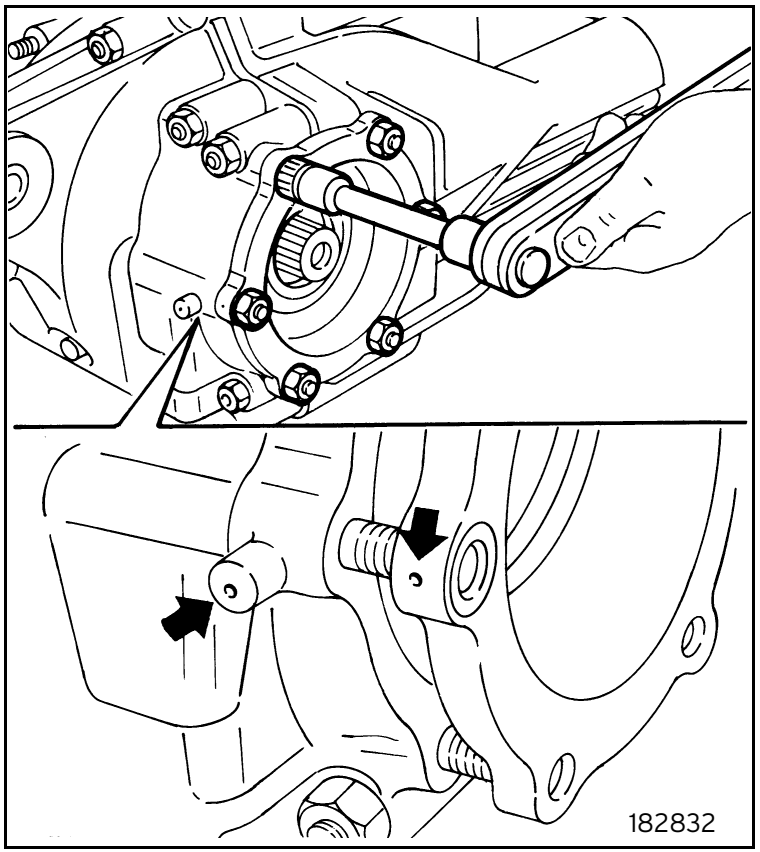

Fig. 32

- Fit an axle shaft flange and fasten the screws (do not torque) (figure 33).
- Check the correct bearing pre-load as follows:
- Fit a suitable tool for measuring the rolling torque on an axle shaft flange (figure 34).
  - Check that the rolling torque (ignoring the pickup) is within the specified values:

    specified torque: 24.0 ± 1.0 Nm
  - Work on adjustment shim A if this is not so:
    - to **increase** torque -> **decrease** thickness of shim A
    - to **decrease** torque -> **increase** thickness of shim A
- Remove the axle shaft flange, the bearing pre-load flange and the differential assembly at the end of these operations

Remove the planet gear set stop from the differential assembly.

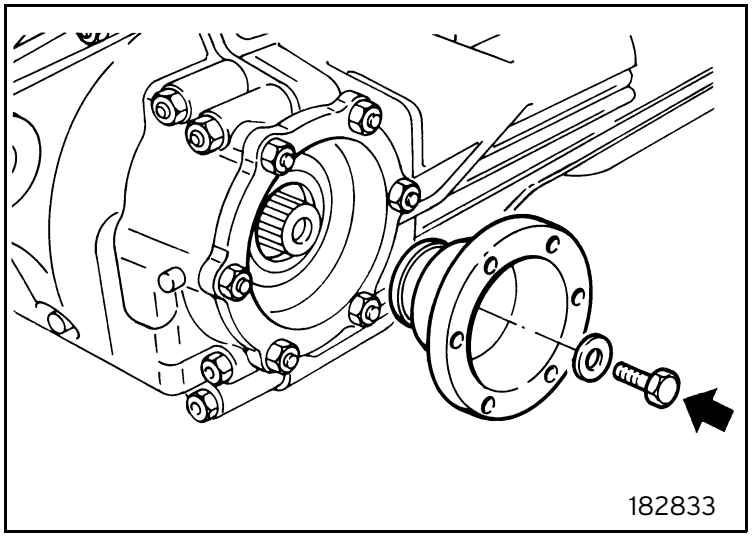

Fig. 33

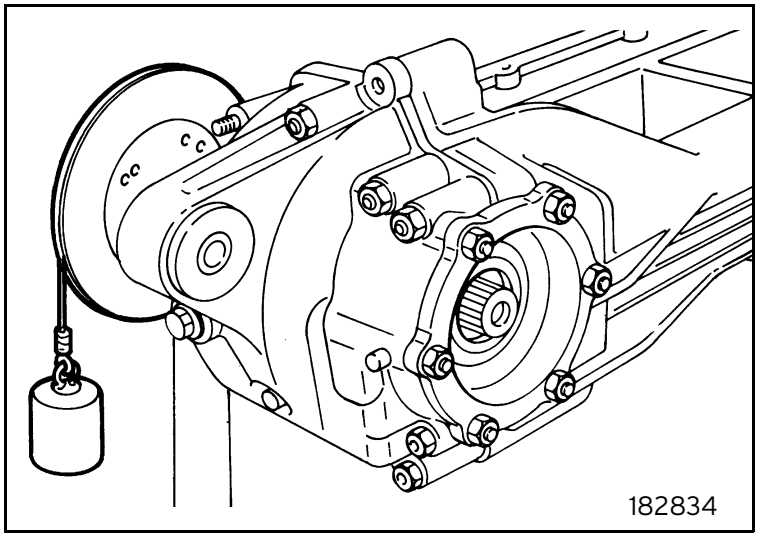

Fig. 34

Pinion assembly
Proceed as follows:
- Use a suitable block to fit the roller bearing (figure 35).
- Fit the snap ring (figure 36).

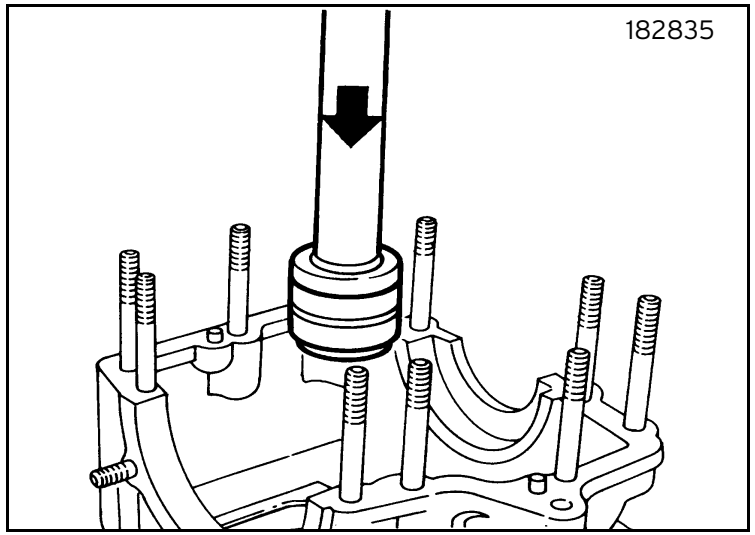

Fig. 35

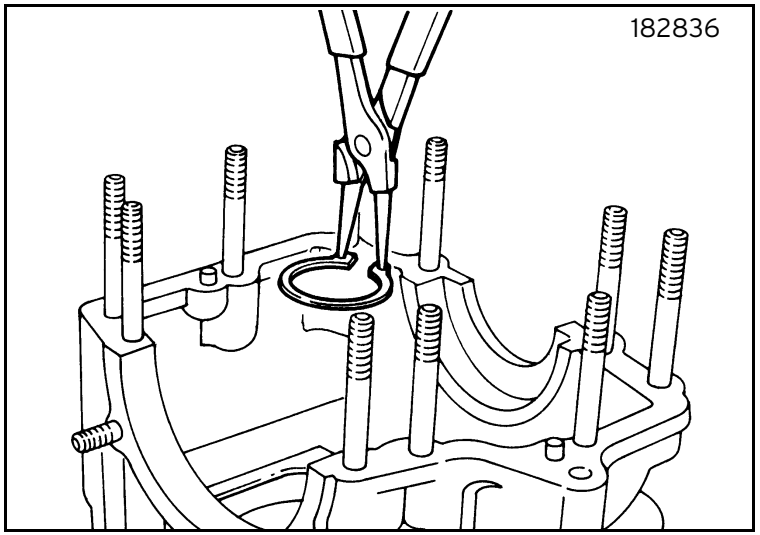

Fig. 36

- Read the value printed on the pinion (arrow) indicating the offset of dimension X (figure 37).

A value with a positive sign indicates that during assembly the pinion plane is to be distanced from the crown by the shown amount, i.e. the value is to be subtracted from the dial gauge reading while adjusting.
A value with a negative sign indicates that during assembly the pinion plane is to be approached to the crown by the shown amount, i.e. the value is to be summed to the dial gauge reading while adjusting.

- Fit the specified tentative adjustment shims C (figure 38):

tentative adjustment shim C: s C = 2.30 mm (total)

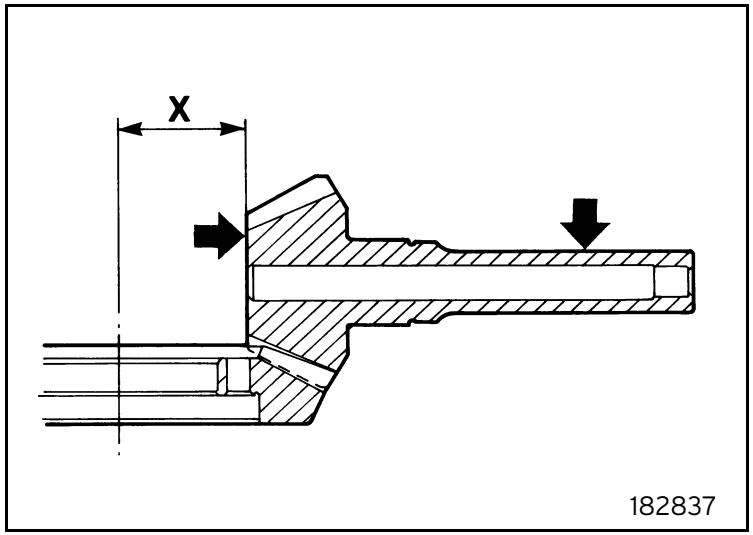

Fig. 37

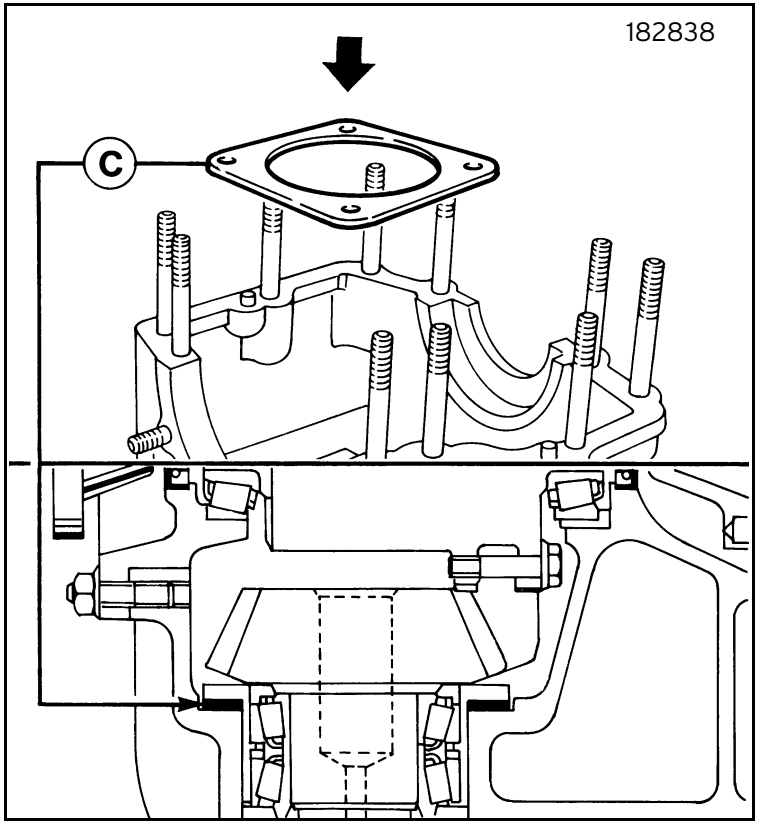

Fig. 38

- Fit the pinion flange with bearings and fasten the screws at the specified tightening torque (figure 39):

pinion flange screws: 30.0 Nm

Arrange the pinion flange with the narrowest corner corresponding to the upper left-hand hole (detail).

- Check the correct value of dimension X as follows (figure 40):
  - Use a thickness gauge to check that the measurement is within the specified range:

dimension X: 73 ± printed value ± 0.03 mm

Proceed as follows to make this measurement correctly (dimensions are expressed in mm):
- Measure height h of the reference plane
- Measure p with a thickness gauge
- Apply the following formula:

$$X = p - h$$

The crown revolution axis corresponds exactly to the closed plane between differential carrier and cover.

  - If this is not so, operate on adjustment shims as follows:
    - to **increase** dimension X -> **reduce** shims C.
    - to **decrease** dimension X -> **increase** shims C.
  - Check dimension X again.

Fasten the pinion flange screws at the specified tightening torque whenever dimension X is measured.

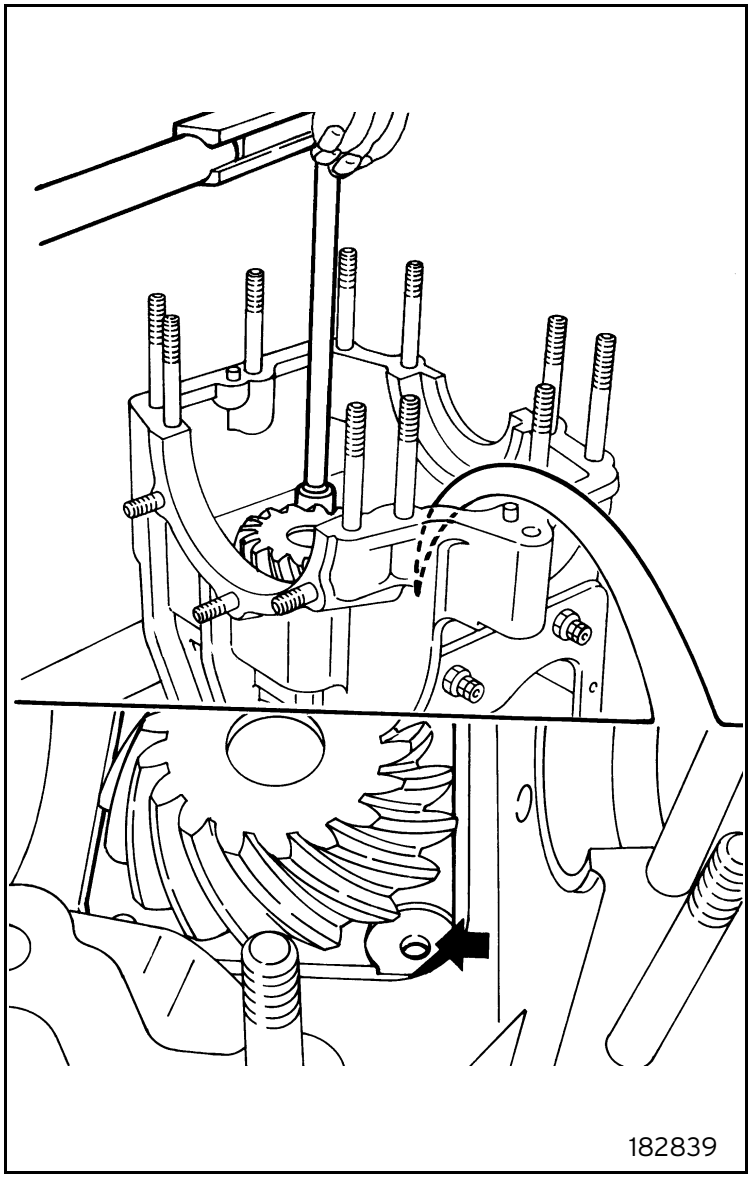

Fig. 39

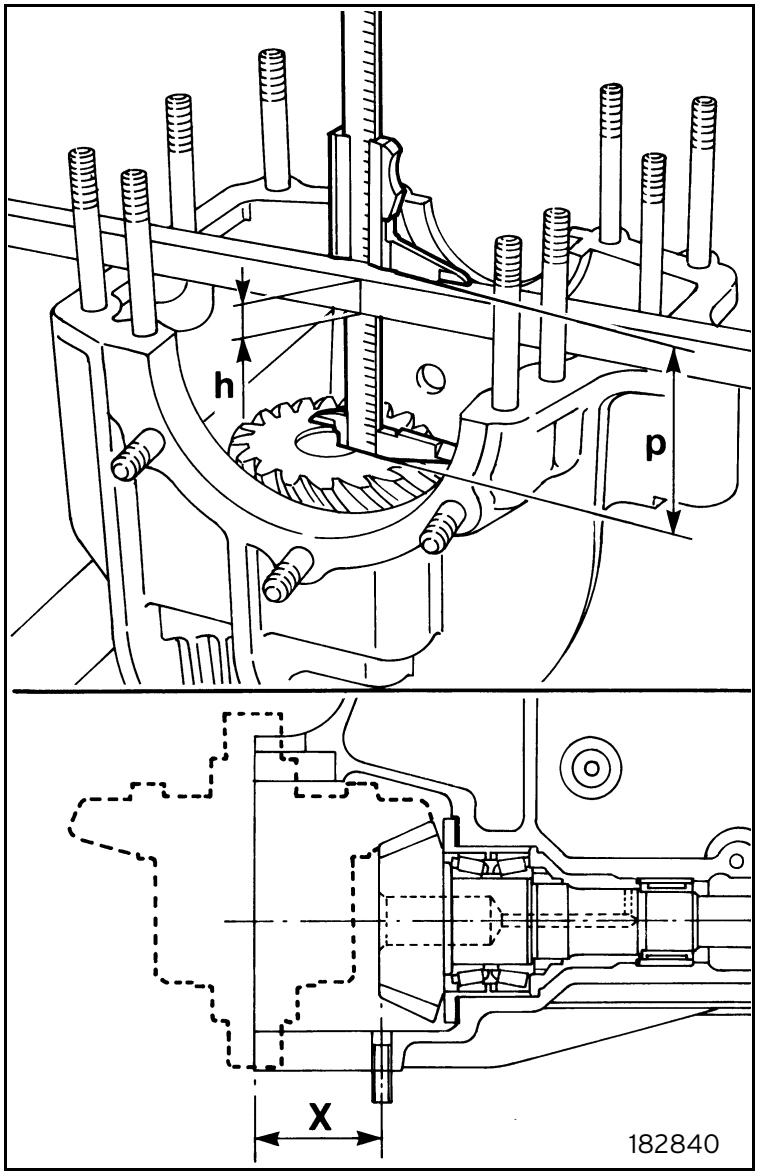

Fig. 40

- Loosen the pinion flange screws, apply strong thread adhesive 52A70 and fasten the pinion flange screws to the specified tightening torque (figure 41) at the end of the operations.

pinion flange screws: 30.0 Nm

The pinion carrier flange must be positioned with the narrowest angle opposite the top left hole (detail).

Pinion-crown clearance adjustment

Assemble the differential as shown in the paragraph "Bearing pre-load determination":

- Fit the previously identified adjustment shims B, fit the roller bearing outer race seat, arrange the differential assembly, fit the differential carrier cover and fasten the nuts at the specified tightening torque, fit adjustment shims A, fit the bearing pre-load flange and fasten the nuts at the specified tightening torque.
- Check the correct pinion-crown clearance as follows:
  - Check that the measurement is within the specified values with a dial gauge (figure 42):

pinion-crown clearance: 0.15 - 0.20 mm

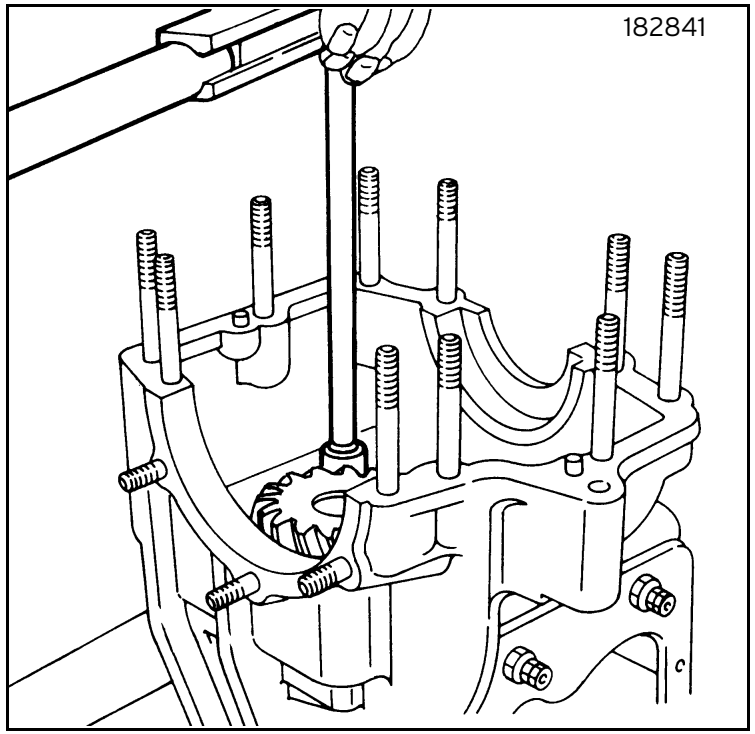

Fig. 41

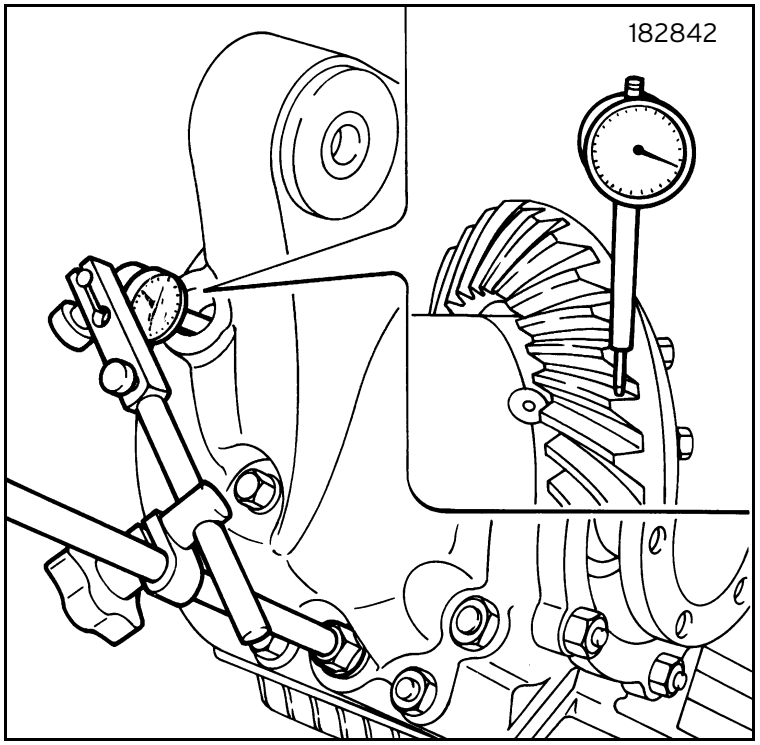

Fig. 42

- If this is not so, work on the adjustment shims as follows (figure 43):
  - to **increase** clearance -> **reduce** thickness B and increase thickness A by the same amount
  - to **reduce** clearance -> **increase** thickness B and reduce thickness A by the same amount.
- Remove the differential carrier cover and the bearing pre-load flange at the end of the operation.

Drive input shaft assembly

Proceed as follows:

- Use a suitable block to fit the drive input shaft rear bearing (figure 44).

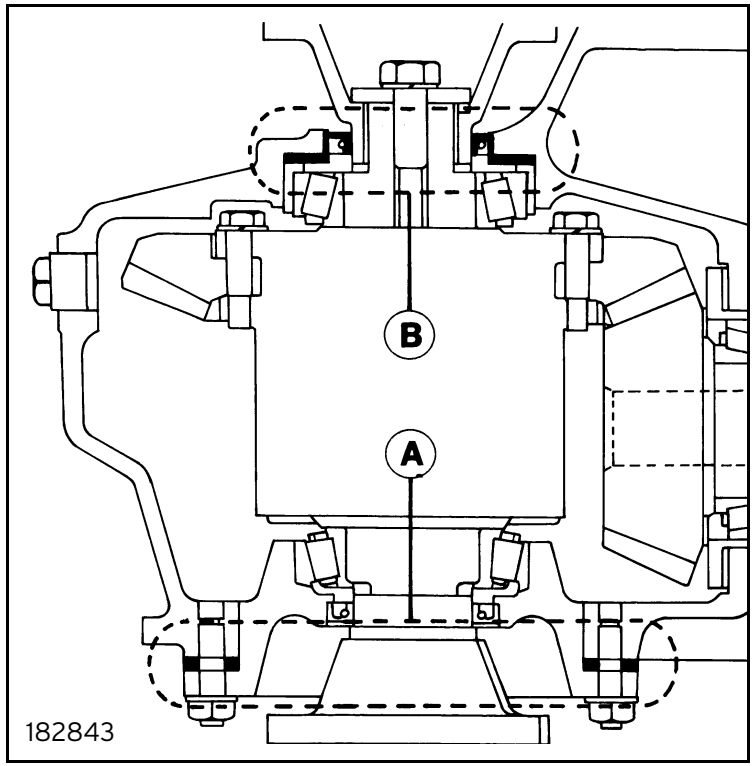

Fig. 43

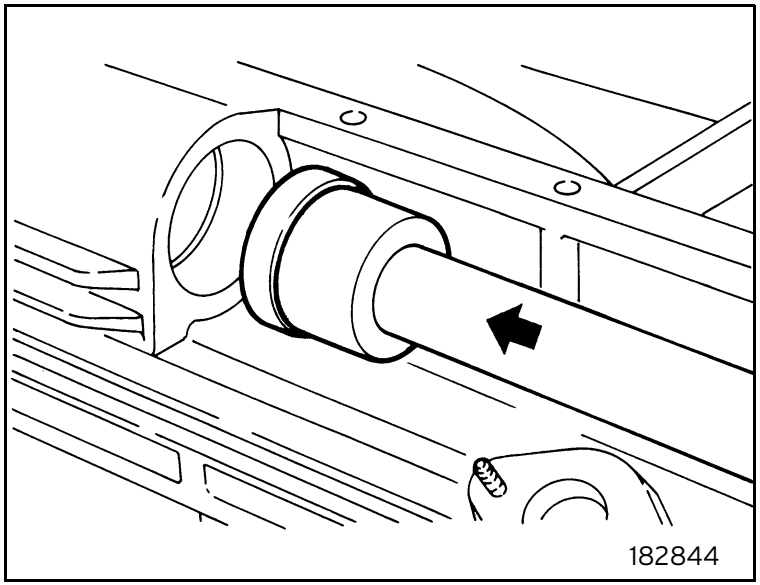

Fig. 44

- Use a suitable block to fit the drive input shaft seal (figure 45).

Direct the seal correctly, i.e. A inside and B outside.

- Fit the first drive input shaft front bearing snap ring (figure 46).

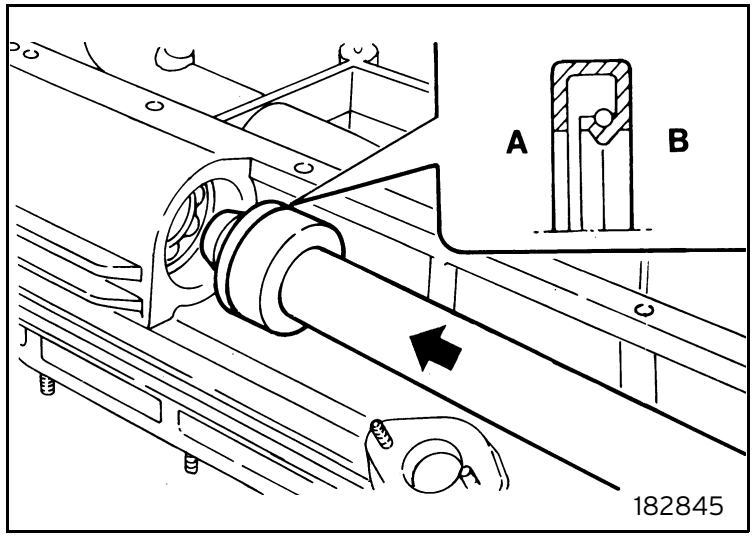

Fig. 45

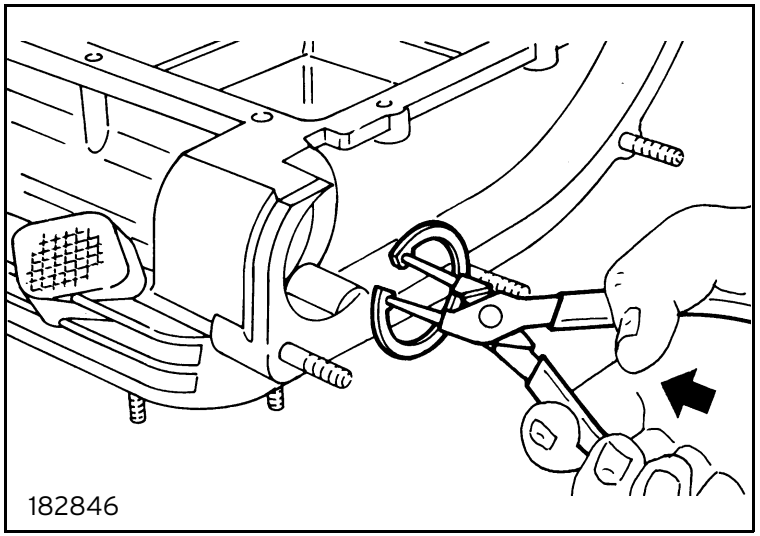

Fig. 46

- Fit the front bearing on the shaft (figure 47).
- Fit the shaft and bearing (figure 48).

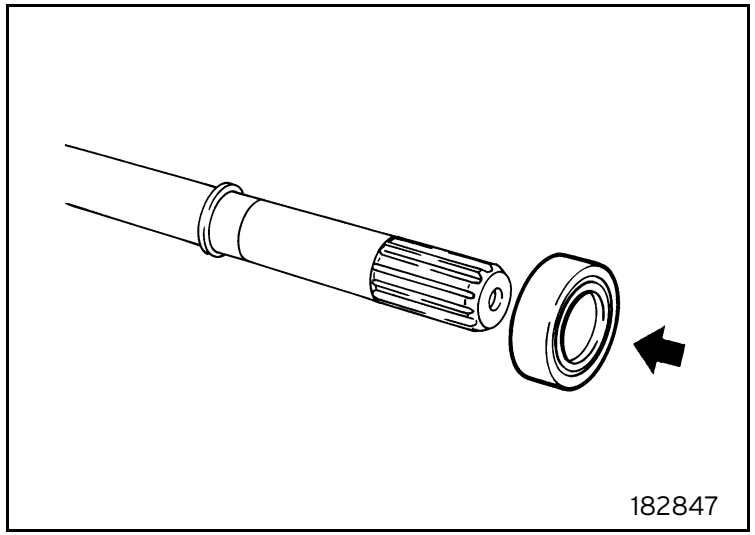

Fig. 47

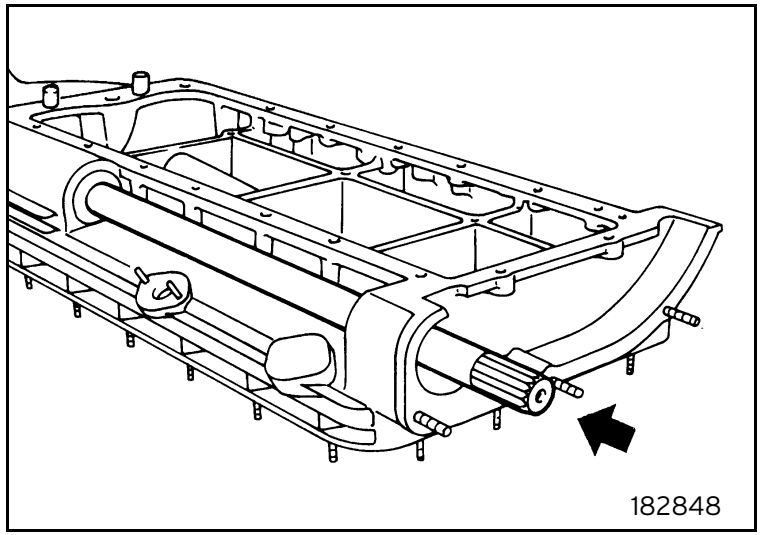

Fig. 48

- Fit the second drive input shaft front bearing snap ring (figure 49).

Final assembly
Proceed as follows:
- Apply Loctite 518 sealant on the union surface between box and box cover. Fit the box cover, lubricate with Molycote 1000 and fasten the nuts at the specified tightening torque (figure 50):

differential carrier nuts: 50.0 Nm

The strip of sealant must be seamless. The sealant must get inside the screw and centring pin holes (detail).

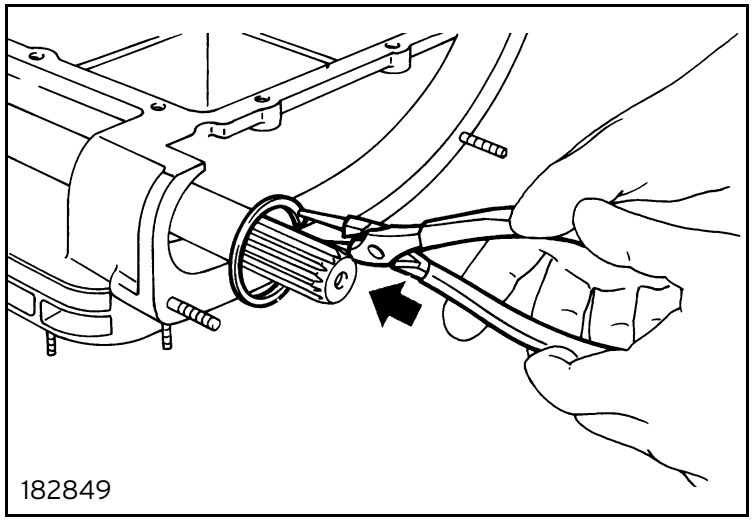

Fig. 49

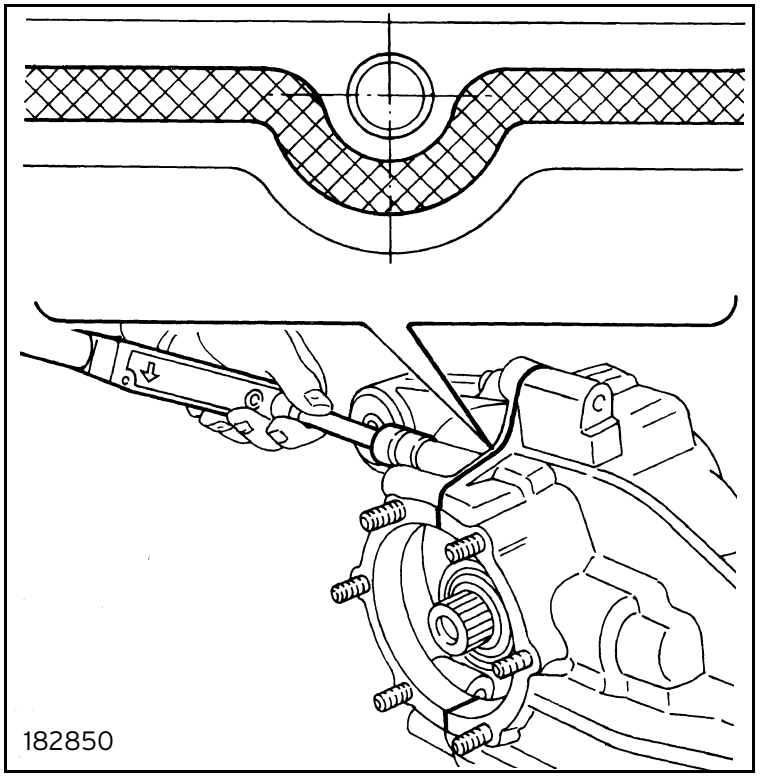

Fig. 50

- Apply Loctite 518 sealant on the union surface between box and bearing pre-load flange. Fit the bearing pre-load flange, lubricate with Molycote 1000 and fasten the nuts at the specified tightening torque (figure 51):

Bearing pre-load flange screws: 40.0 Nm

Direct the flange so that the reference signs coincide (detail).
The strip of sealant must be seamless. The sealant must get inside the screw and centring pin holes (detail).

- Use a suitable block to fit the seal (figure 52). Repeat the operation on the other side.

Direct the seal correctly, i.e. A inside and B outside.

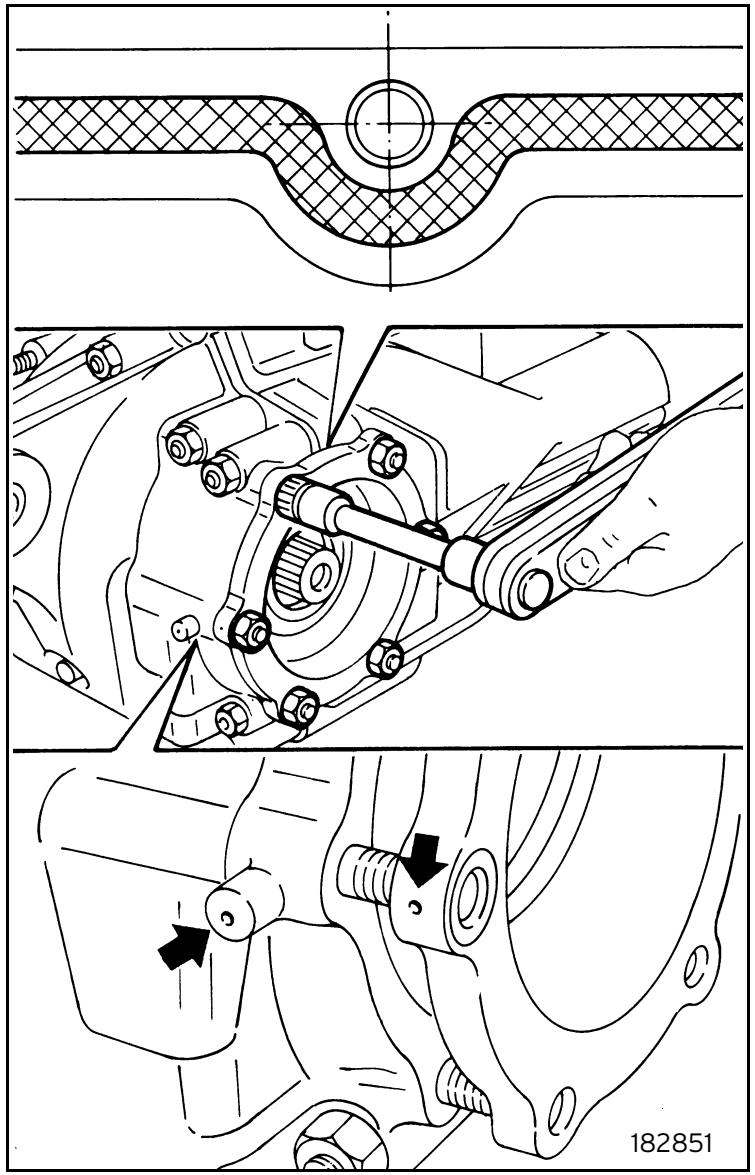

Fig. 51

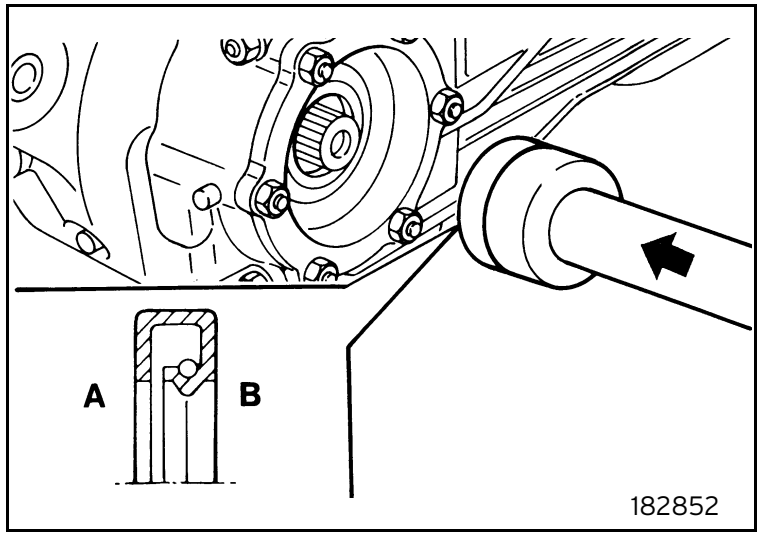

Fig. 52

- Apply Loctite 641 sealant on the shaft groove (detail "a"), apply sealing paste on the inner side of the washer (detail "b"), fit the axle shaft flange, lubricate with Molycote 1000 and fasten the screw at the specified tightening torque (figure 53):

  axle shaft flange screw: 91.4 Nm

  Repeat the operation on the other side.

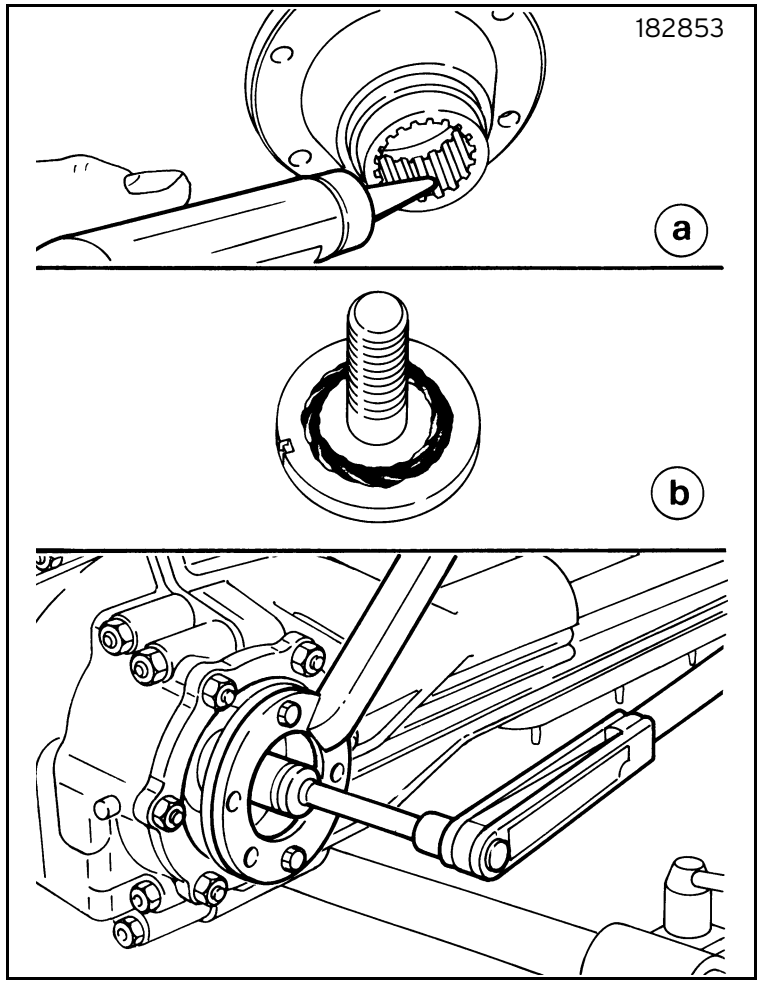

Fig. 53

INSPECTIONS AND ADJUSTMENTS

Oil change

Proceed as follows:

- Remove the drain cap A and let all the oil flow out from the differential (figure 54).
- Clean the cap and fasten it back.
- Pour in oil of the specified type through filler B until the oil level reaches the lower edge of the hole.

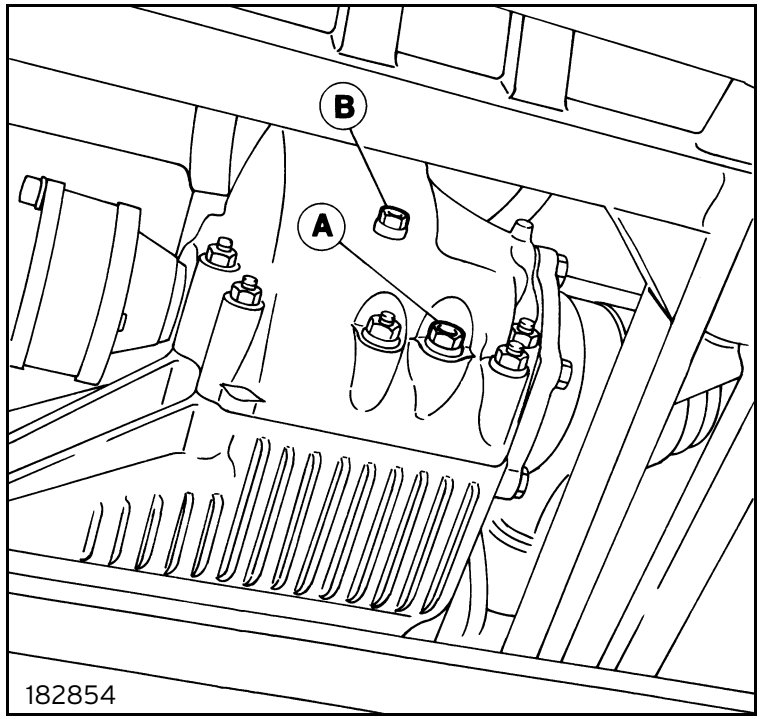

Fig. 54

Vehicle-fitted pinion-crown coupling check

Check the pinion-crown clearance when fitted in the vehicle as follows:

- Remove the cap provided for this purpose (figure 55).
- Check that the value is within the specified range with a dial gauge (figure 56):

  pinion-crown clearance: 0.15-0.20 mm

  Overhaul the differential if this is not so.

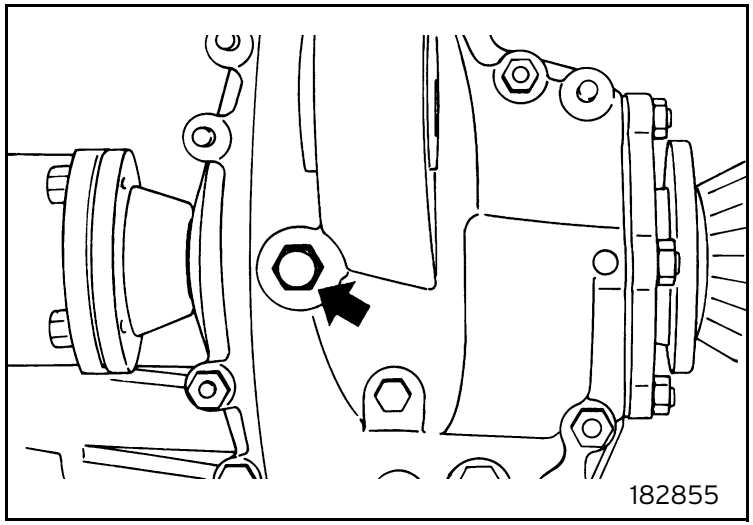

Fig. 55

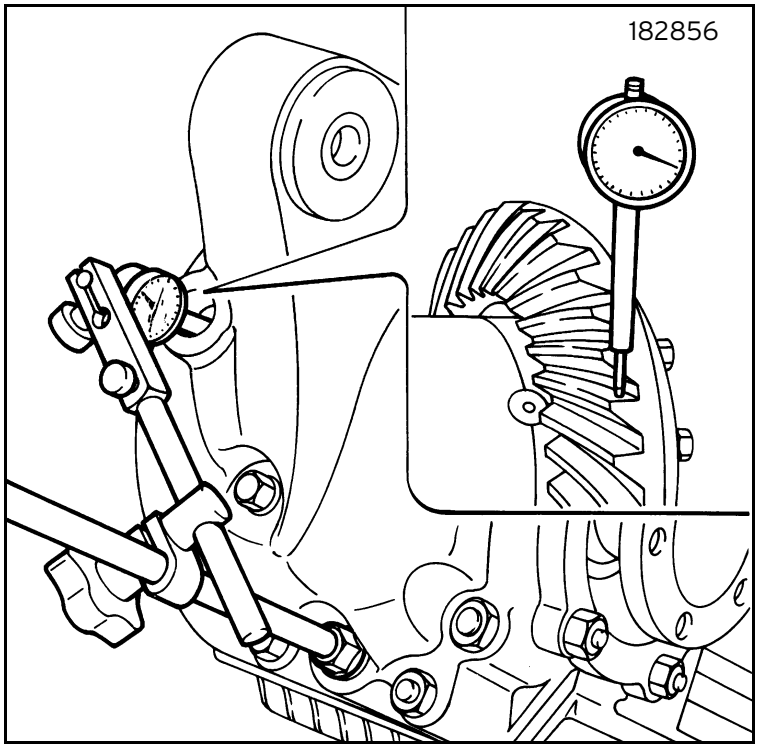

Fig. 56

Vehicle-fitted axle shaft flange seal replacement

Proceed as follows:

- Take the vehicle to a shop jack.
- Remove the drive output flange axle shaft.
- Loosen the axle shaft fastening screw (figure 3).
- Use a suitable puller and shim to remove the flange (see figure 4).
- Remove the seal (see figure 5).
- Fit a new seal (see figure 52).

Respect the correct direction of the seal.

- Apply Loctite 641 sealant on the shaft groove, apply sealing paste on the inner side of the washer, fit the axle shaft flange, lubricate with Molycote 1000 and fasten the screw at the specified tightening torque (figure 53):

  axle shaft flange screw: 91.4 Nm

- Fit the drive output flange axle shaft.