Index

21 - GEARBOX

CONTENTS

DESCRIPTION P. 3

SPECIFICATIONS AND DATA P. 6
Main features
Gear ratios STANDARD
Gear ratios "A" VERSION
Gear ratios "C" VERSION
Oil pump

OPERATING RULES AND PRECAUTIONS P. 9

REMOVAL AND REFIT P. 10

DISASSEMBLY P. 12
Gear engagement devices removal
Countershaft removal
Reversing shaft and main shaft removal
Bearings removal

CHECKS P. 27
Main shaft
Countershaft
Transmission shaft
Idle gears clearance check
Oil pump
Verifications and checks on other components

REASSEMBLY P. 38
Bearings reassembly
Reversing shaft and main shaft reassembly
Countershaft reassembly
Gear engagement device reassembly
Covers and accessories reassembly
Gear engagement internal devices adjustment
Completion
Gear engagement external devices adjustment

CHECKS AND ADJUSTMENTS P. 57
Oil replacement

DESCRIPTION

The gearbox is installed in the engine facing toward the passenger compartment.
A cylindrical wheel transmission receives the movement from the driven shaft and sends it through a shaft inside the crankcase to the rear differential and through a propeller shaft to the front differential. The distribution between the axles is ensured by a viscous coupling inside the transmission.
It has five synchronised ratios and reverse gear, without direct drive.
Gearbox lubrication is through a gear pump without relief valve, geared to the main shaft.

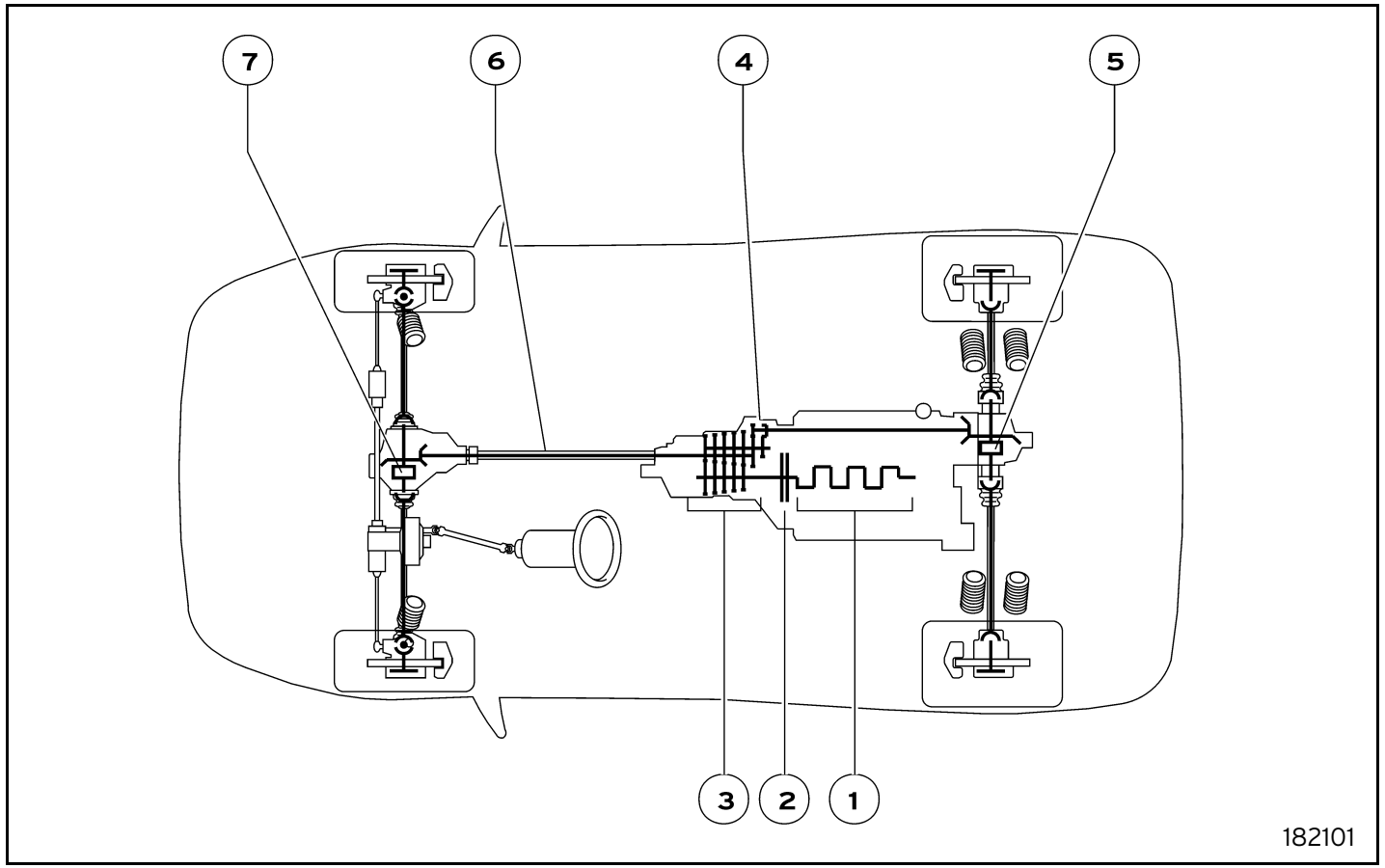

Fig. 1 - Movement transmission

1 Engine
2 Clutch
3 Gearbox
4 Viscous coupling and front transmission
5 Rear differential
6 Propeller shaft
7 Front differential

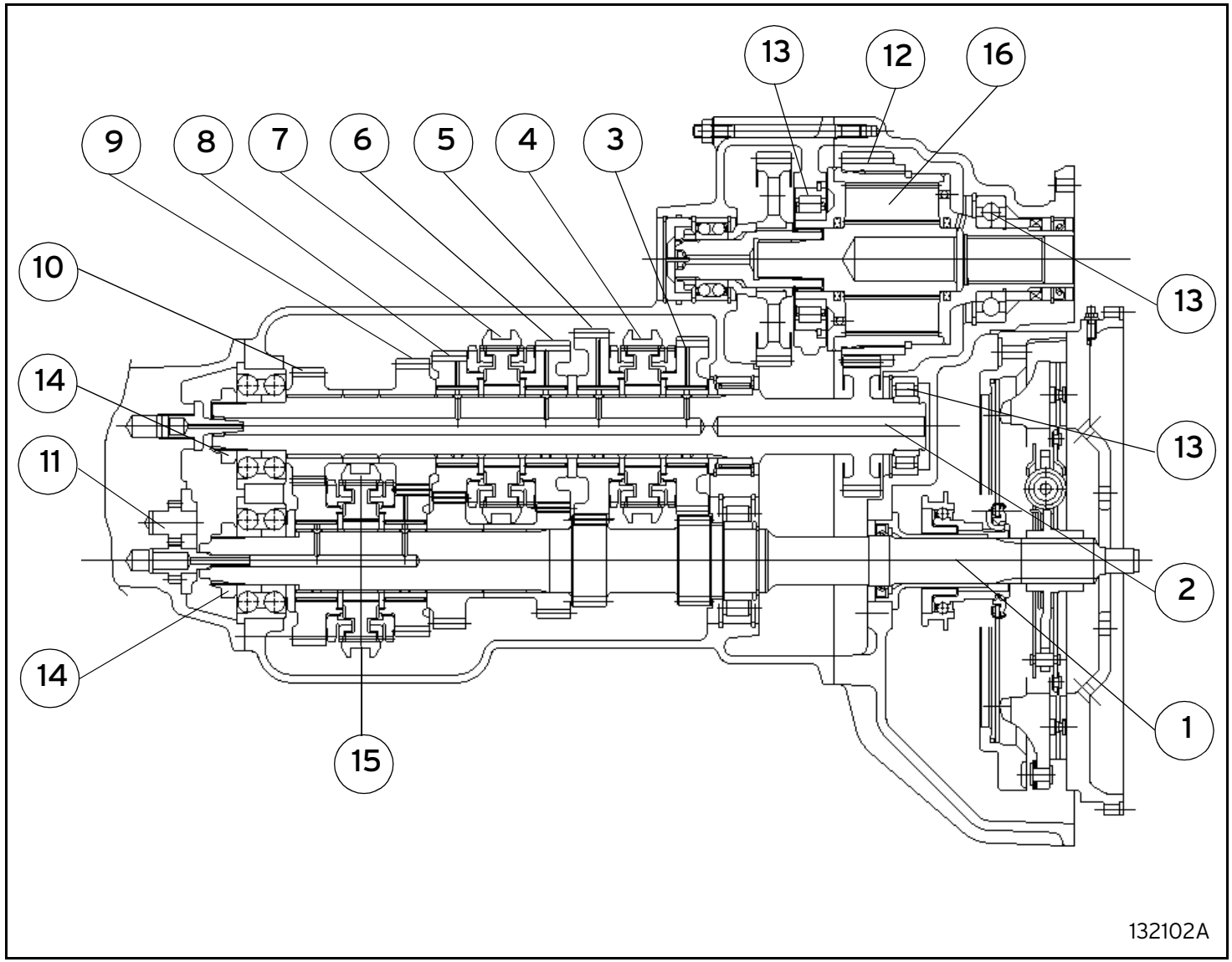

Fig. 2 - Longitudinal section top view

1 Main shaft
2 Driven shaft
3 Reverse gear
4 Synchroniser for 1st gear and reverse
5 1st speed
6 2nd speed
7 Synchroniser for 2nd and 3rd gear
8 3rd speed
9 4th speed
10 5th speed
11 Oil pump
12 Differential transmission gear
13 Bearing
14 Ring nut
15 Synchroniser for 4th and 5th gear
16 Viscous coupling

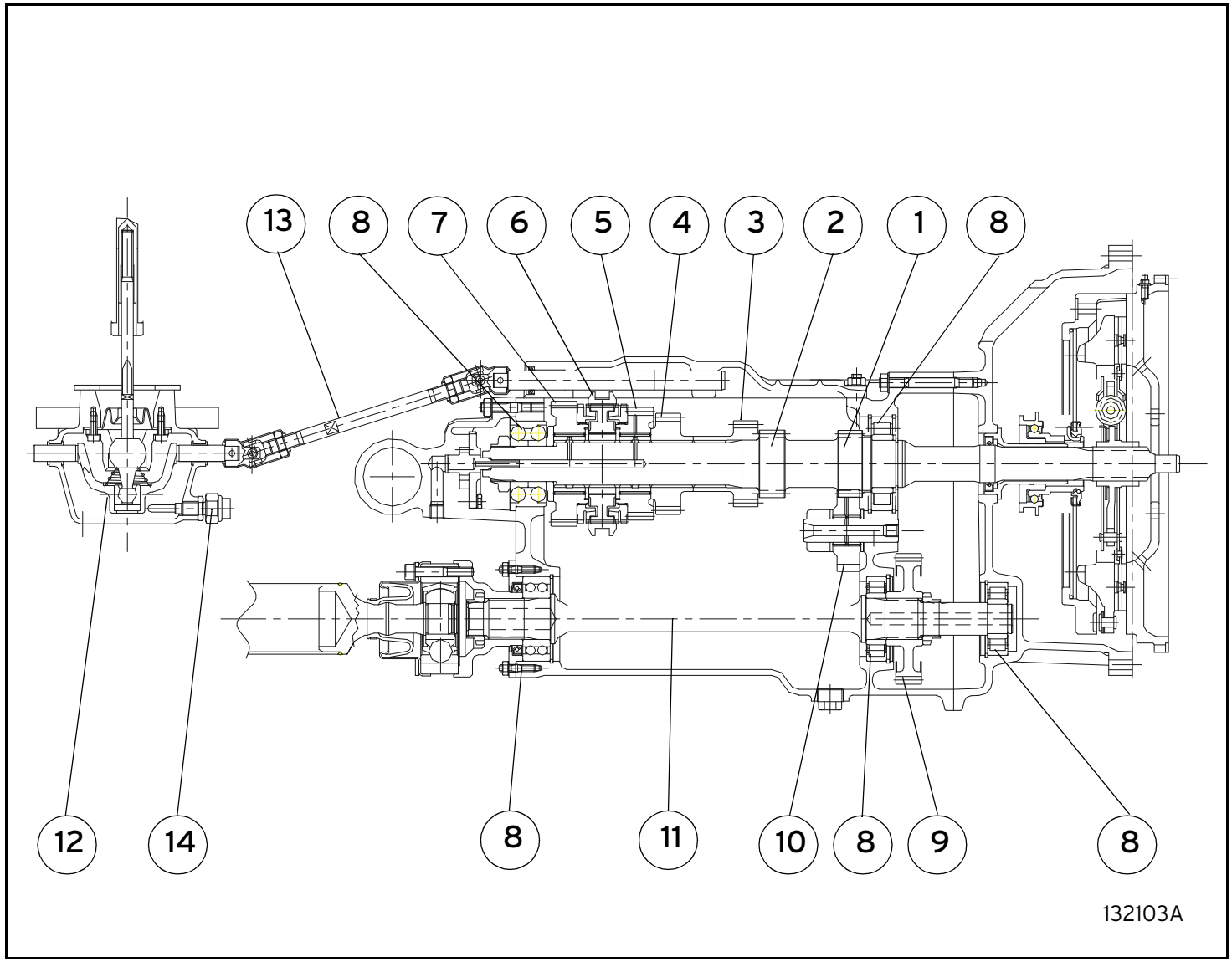

Fig. 3 - Longitudinal section

1 Reverse gear
2 1st speed
3 2nd speed
4 3rd speed
5 4th speed
6 Synchroniser for 4th and 5th gear
7 5th speed
8 Bearing
9 Front shaft transmission gear
10 Reverse idle gear
11 Front driving shaft
12 Shift lever housing
13 Linkage rod
14 Reverse light switch

SPECIFICATIONS AND DATA

Main features

Gears	5 + R
Synchronisers	Floating rings
Backlash	0.05 to 0.11 (all gears)
Lubrication	By gear pump

Gear ratios STANDARD

Gear ratios	1st	1 : 2.312	(37/16)
	2nd	1 : 1.524	(32/21)
	3rd	1 : 1.125	(27/24)
	4th	1 : 0.888	(24/27)
	5th	1 : 0.676	(23/34)
	R	1 : 2.125	(34/16)
Driven shaft and transmission		1 : 1.619	(34/21)
Viscous coupling and front crown wheel and pinion		1 : 0.811	

Gear ratios "A" VERSION

Gear ratios	1st	1 : 2.312	(37/16)
	2nd	1 : 1.524	(32/21)
	3rd	1 : 1.125	(27/24)
	4th	1 : 0.888	(24/27)
	5th	1 : 0.676	(23/34)
	R	1 : 2.125	(34/16)
Driven shaft and transmission		1 : 1.667	(35/21)
Viscous coupling and front crown wheel and pinion		1 : 0.811	

Gear ratios "C" VERSION

Gear ratios	1st	1 : 2.312	(37/16)
	2nd	1 : 1.524	(32/21)
	3rd	1 : 1.125	(27/24)
	4th	1 : 0.888	(24/27)
	5th	1 : 0.697	(23/33)
	R	1 : 2.125	(34/16)
Driven shaft and transmission		1 : 1.667	(35/21)
Viscous coupling and front crown wheel and pinion		1 : 0.811	

The different ratios are identified by a letter in front of the gear number (see GROO – GENERAL):

- no letter : STANDARD
- letter "C" : short ratios EEC vehicles
- letter "A" : short ratios USA vehicles.

Oil pump

N° teeth	12
End float	0.013 to 0.078
Backlash	0.08 to 0.12

OPERATING RULES AND PRECAUTIONS

WARNING

- All operations are to be carried out with utmost attention and care to prevent injuries.
- For some procedures special tools are indicated . The use of these tools is necessary in order to work in safety.
- Attain to current safety standards for workshops. Where necessary the Manual contains special precautions to be taken to avoid hazardous situations arising.
- When using chemical products scrupulously attain to the instructions on the safety card that the supplier must hand over to the user.

IMPORTANT NOTES

- All operations are to be carried out with utmost attention and care to avoid damaging the components.
- To loosen tightly adherent parts knock lightly with an aluminium or lead hammer for ferrous parts, or a resin or wooden hammer for light alloy parts.
- When disassembling, make sure that parts that are to be marked have the reference marks.
- When reassembling lubricate where necessary to avoid meshing and seizing when first starting up.
- When reassembling it is fundamental to respect torques and adjustment data.
- At each reassembly replace seal gaskets, seal rings, circlips, safety plates, self-locking nuts or with edges for caulking and any parts that have deteriorated.
- When reassembling use Loctite 518 sealant where indicated.
- When reassembling use Loctite 52A42 medium thread stop where indicated.

REMOVAL AND REFIT

Proceed as follows:

- remove the engine-gearbox group from the car, following the instructions given in section 10;
- remove the securing screws between the clutch cover and engine block (figures 4 and 5);

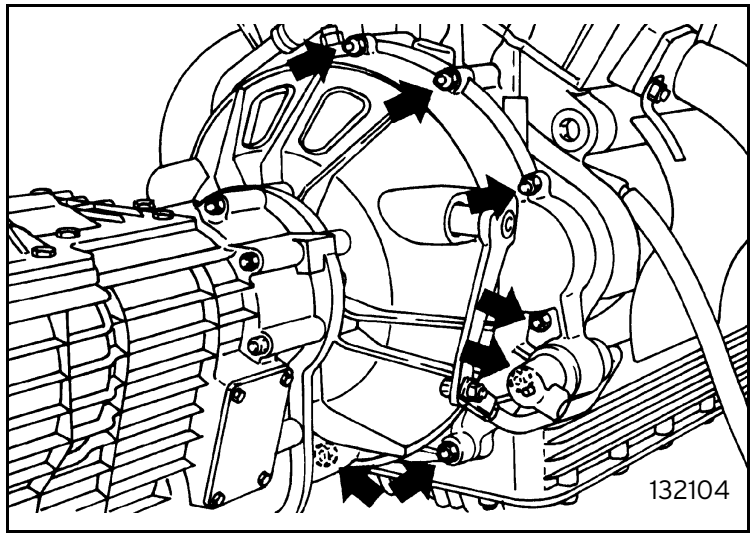

Fig. 4

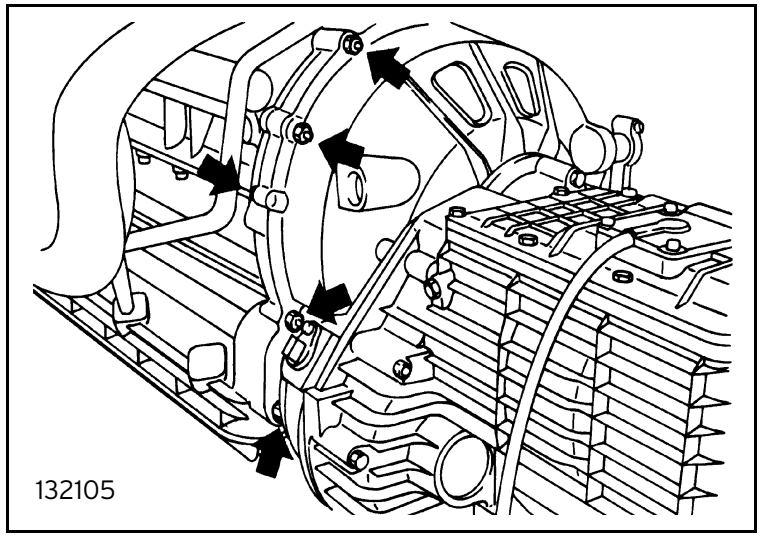

Fig. 5

- separate the gearbox from the engine and set the assembly on a stand (figure 6) with suitable clamping brackets;

Adequate equipment must be used to handle the group. Make sure the group is correctly and firmly secured to the stand so that it cannot overturn or accidentally fall.

To refit follow the steps in the reverse order to removal and in particular:
- spread Loctite 518 sealant on the sealing surfaces, then fit the gearbox-clutch cover assembly and lock the securing screws to the specified torque;

clutch cover screws: 25 Nm

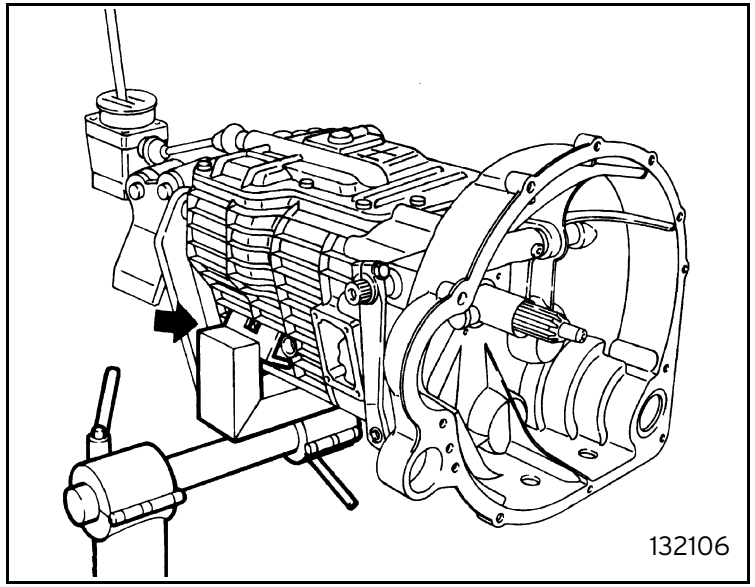

Fig. 6

DISASSEMBLY

Covers and accessories removal

- remove the cover giving access to the control levers (figure 7);
- remove the screws securing the turret to the supporting frame (figure 8);

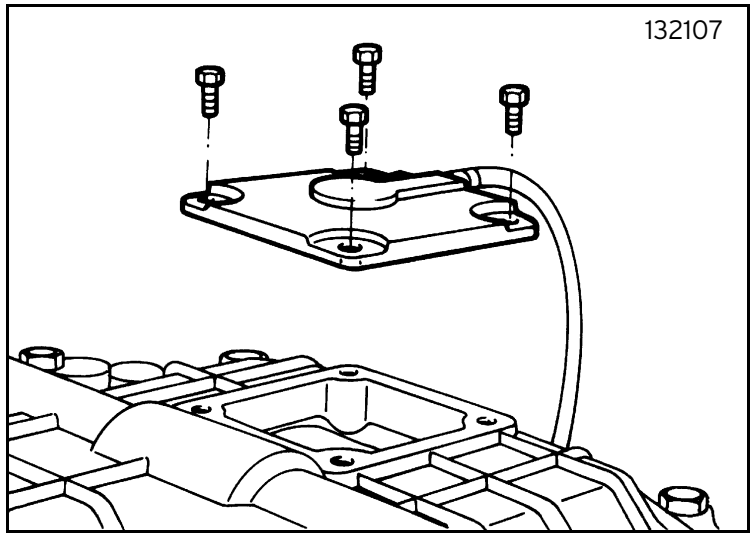

Fig. 7

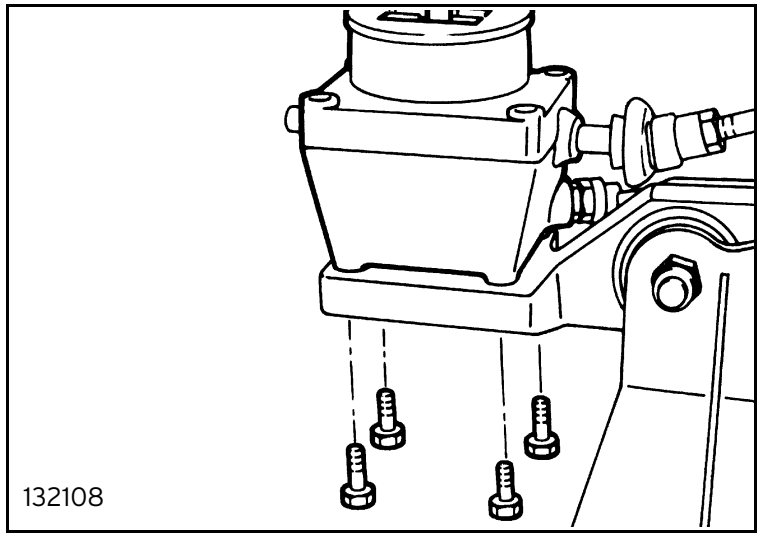

Fig. 8

- remove the upper cover securing screws and remove the turret-cover assembly using a plastic hammer if necessary (figure 9);
- unscrew the securing bolt and remove the turret supporting frame (figure 10);

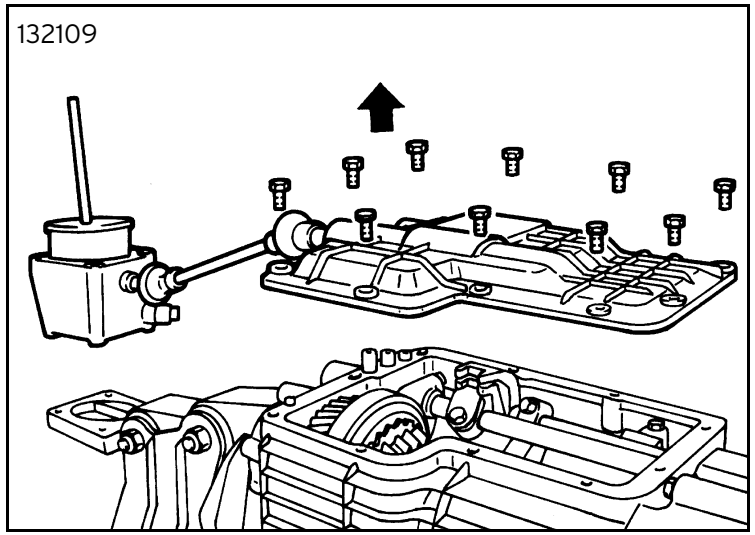

Fig. 9

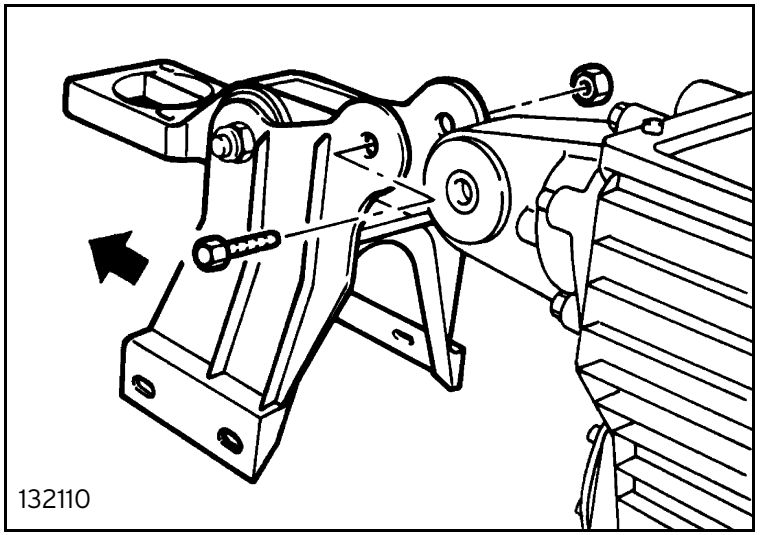

Fig. 10

- loosen the securing screws of the two forks, then manually engage two gears through the relevant control forks to prevent the shafts from rotating; remove the oil seal ring, the circlip and unscrew the locking ring nut of the rear driving shaft bearing (figure 11) using tool 962495038;
- remove the screws securing the side cover and remove the cover (figure 12);

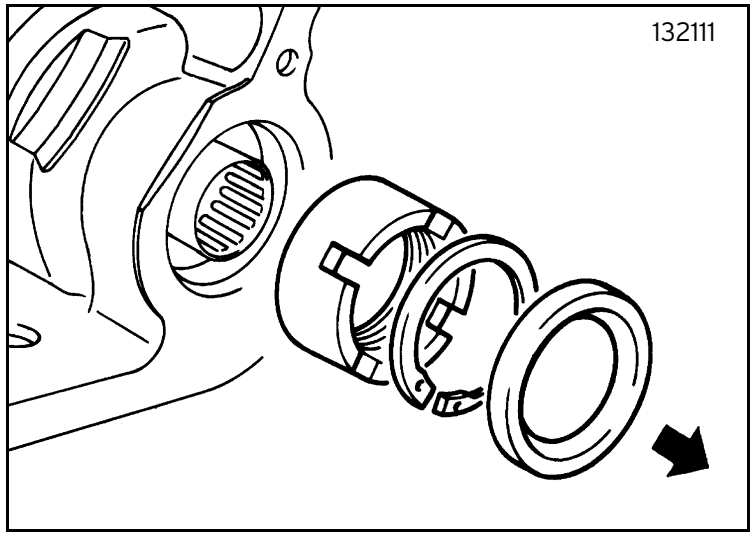

Fig. 11

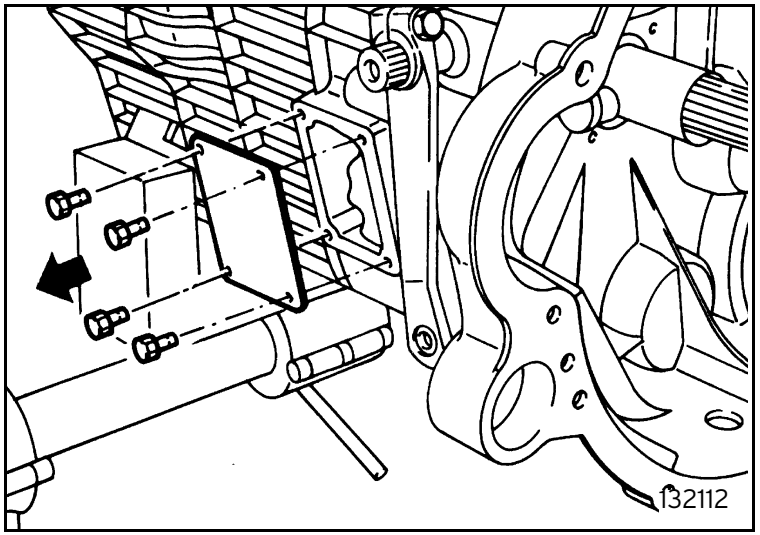

Fig. 12

- remove the bolts securing the clutch cover to the gear housing and very carefully withdraw the cover assembly, using a plastic hammer if necessary (figure 13);

Pay attention to the nut inside the upper cover (A) and that inside the side cover (B).

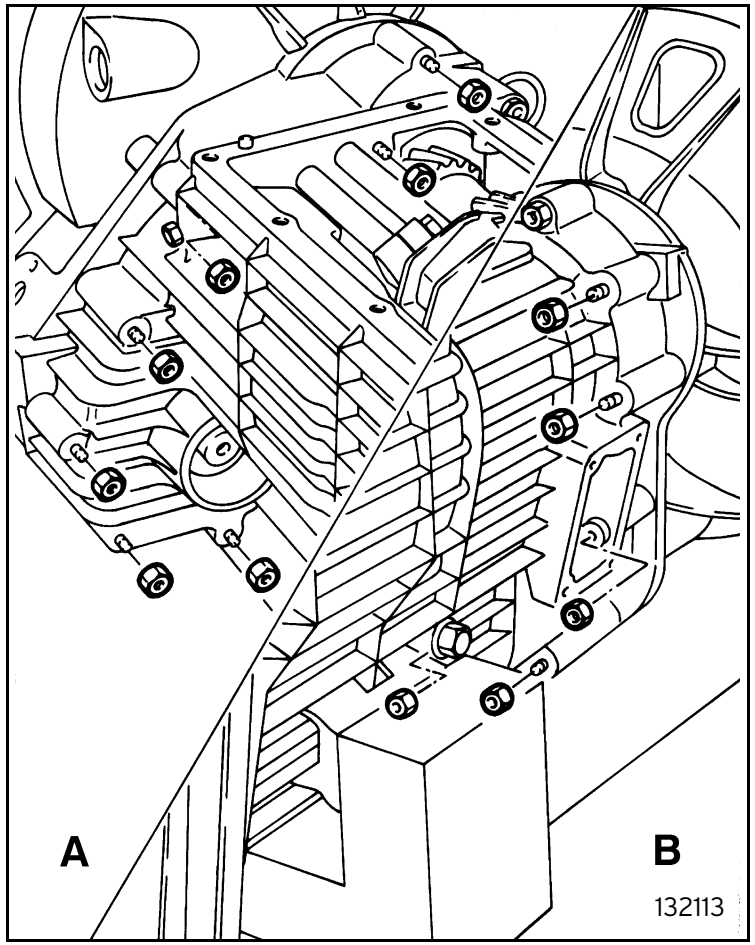

Fig. 13

- remove the caulking that prevents unscrewing, then using tool 960095012 unscrew the locking nut of the front output flange and remove the relevant flange (figure 14);
- remove the circlip and the oil seal ring (figure 15);

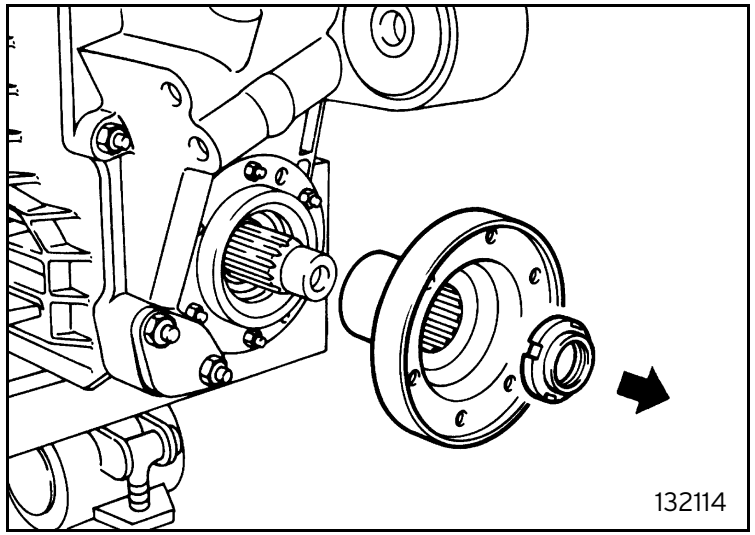

Fig. 14

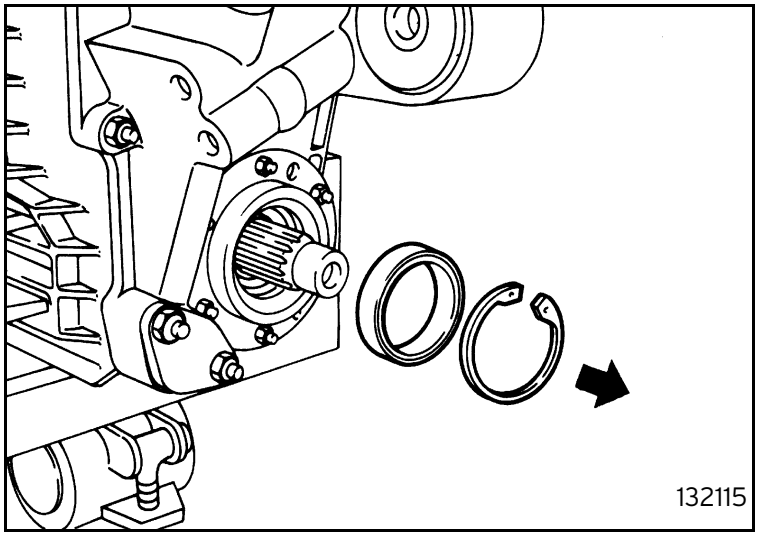

Fig. 15

- remove the securing nuts and take out the gearbox oil filter, recovering the two O-rings (figure 16);
- unscrew the securing nuts and remove the gearbox oil pump body, using a plastic hammer if necessary (figure 17);

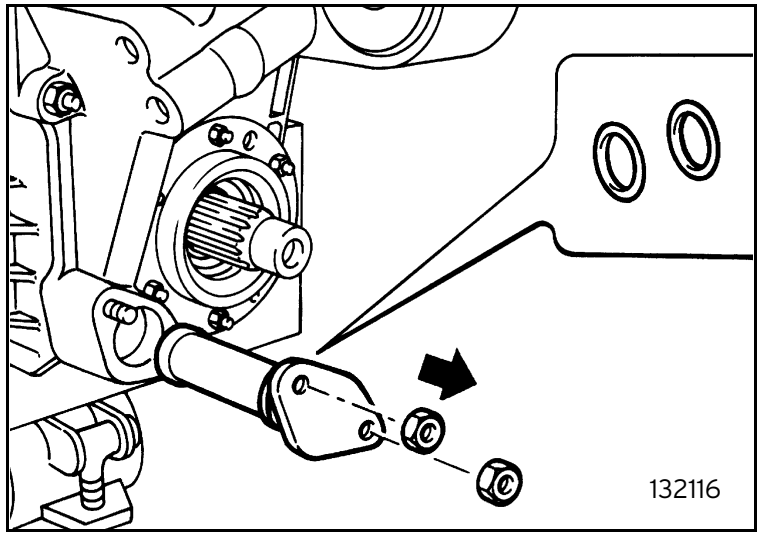

Fig. 16

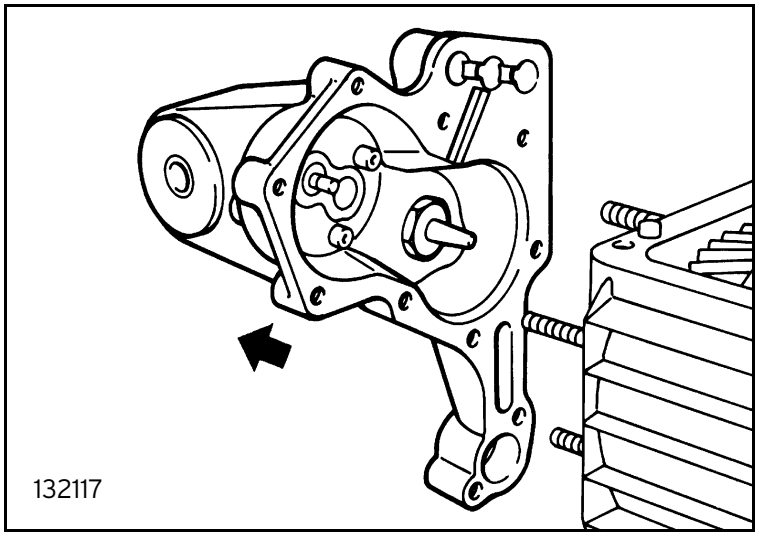

Fig. 17

- remove the circlip, remove the cover and unscrew the transmission shaft securing nut using tool 962495025 (figure 18);
- remove the final drive transmission with the viscous joint (A) and front driving shaft (B) (figure 19);

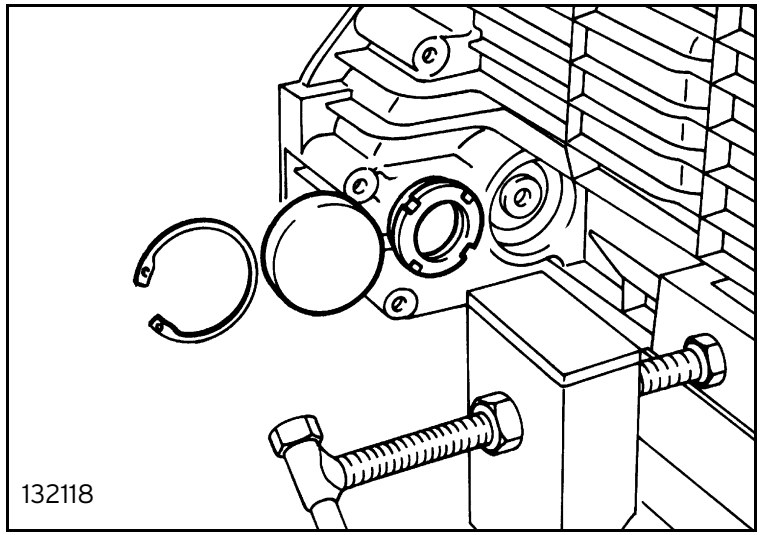

Fig. 18

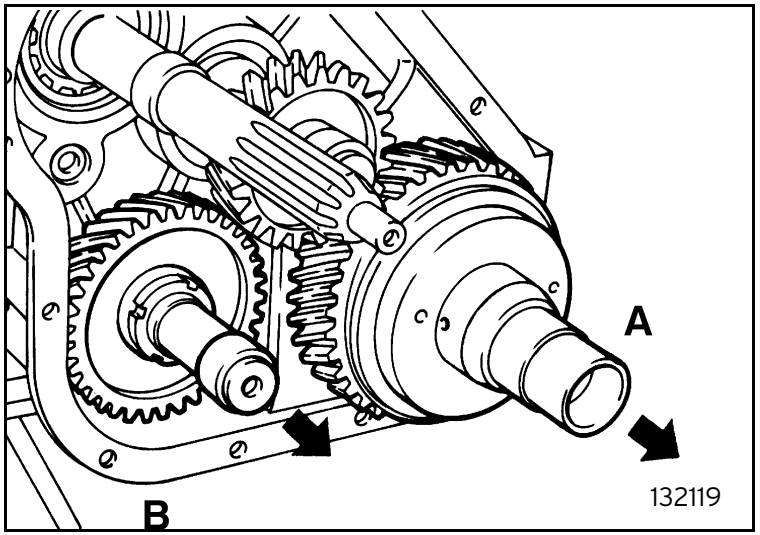

Fig. 19

- remove the front drive transmission bearing, then remove the shaft, at the same time recovering the relevant gear (figure 20);

Gear engagement devices removal

- remove the springs and rod retaining balls (figure 21);

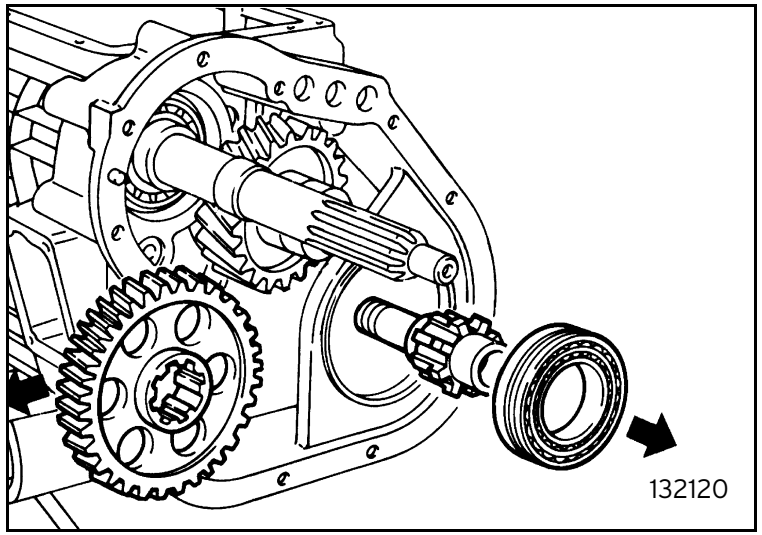

Fig. 20

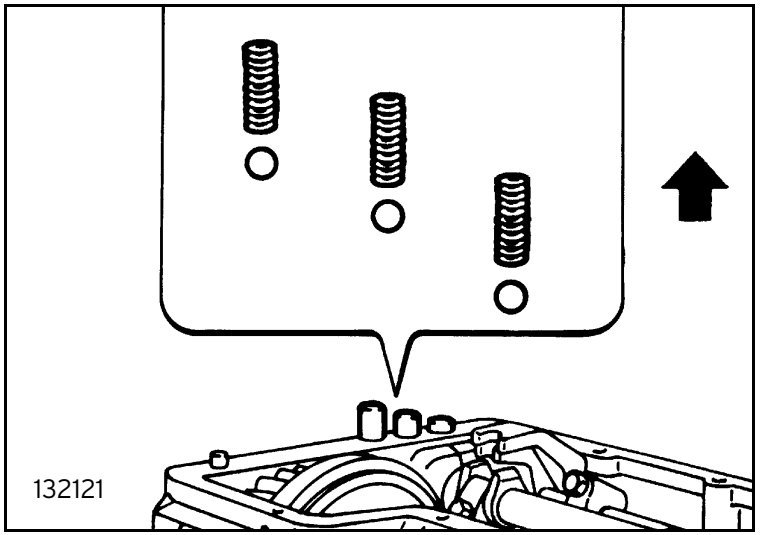

Fig. 21

- remove the three screws securing the ratchets and slacken the fork securing screws (figure 22);

⚠ Raise the I/RM rod control ratchet to have access to the II/III rod ratchet screw.

- take out the IV/V control rod with its ratchet and fork (figure 23);

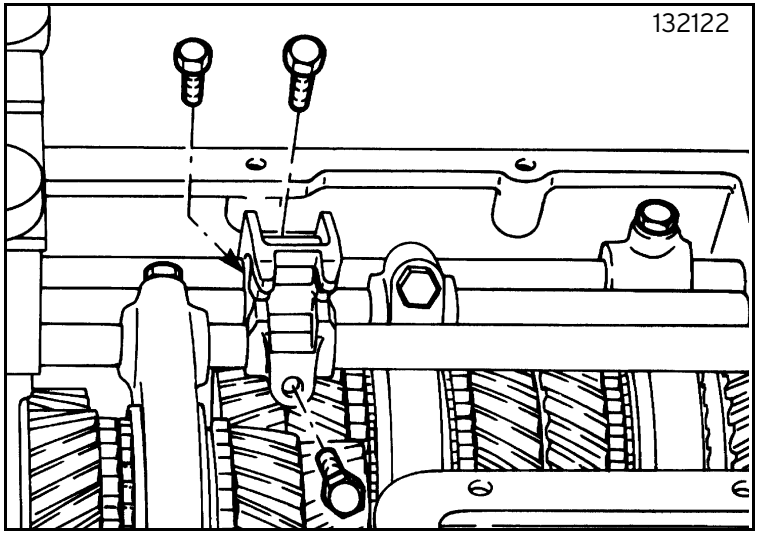

Fig. 22

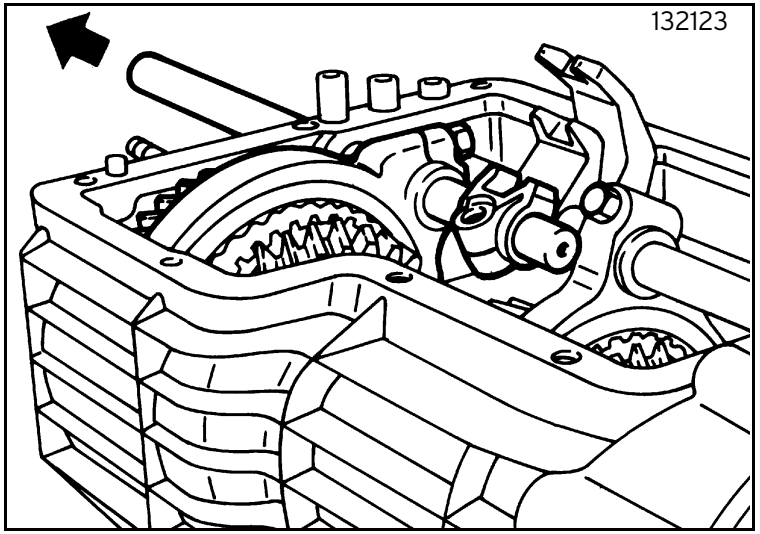

Fig. 23

- take out the II/III control rod with its ratchet and fork (figure 24);

Make sure you recover the pins that prevent simultaneous engagement of two gears.

- take out the I/RM control rod with its ratchet and fork (figure 25);

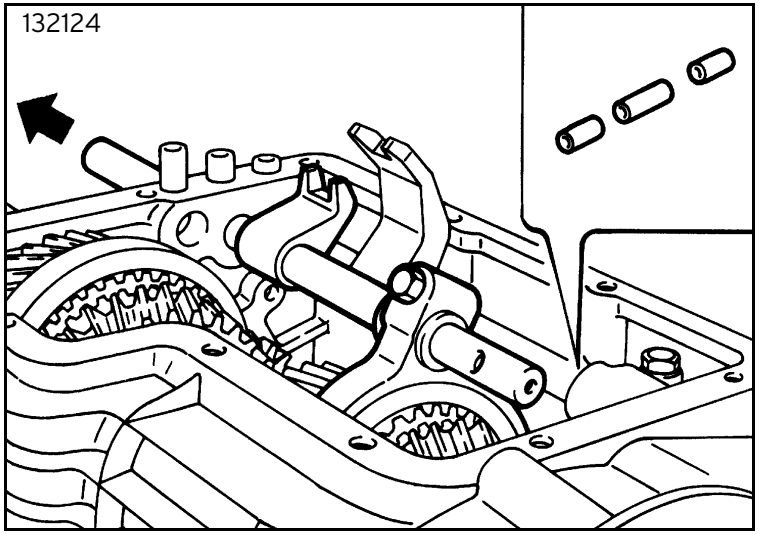

Fig. 24

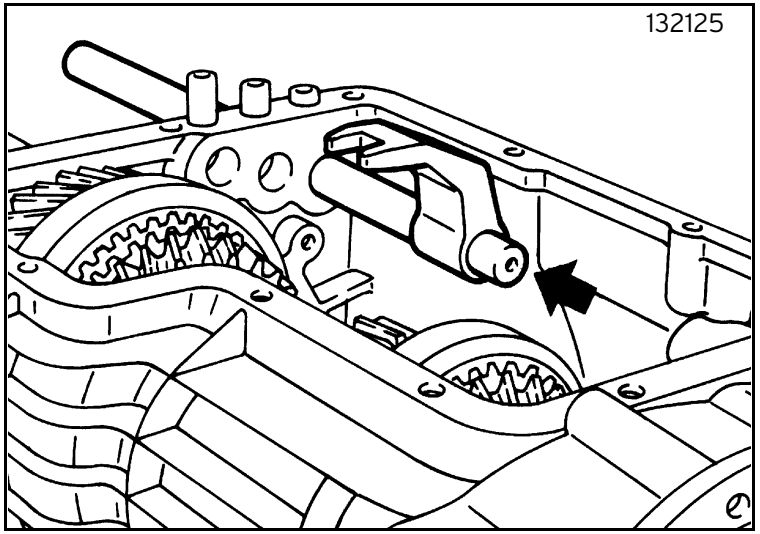

Fig. 25

Countershaft removal

- remove the caulking that prevents unscrewing, then unscrew the nut locking the main shaft on oil pump side (A) and the nut locking the countershaft (B) oil pump side (figure 26);
- take out the countershaft recovering as you go all the parts it is composed of (figure 27);

Be cautious during this operation due to the weight and shape of the components to be handled.

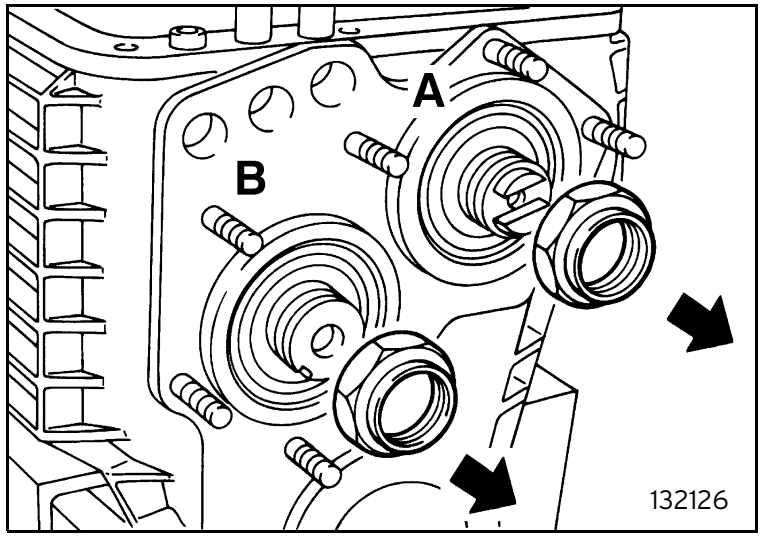

Fig. 26

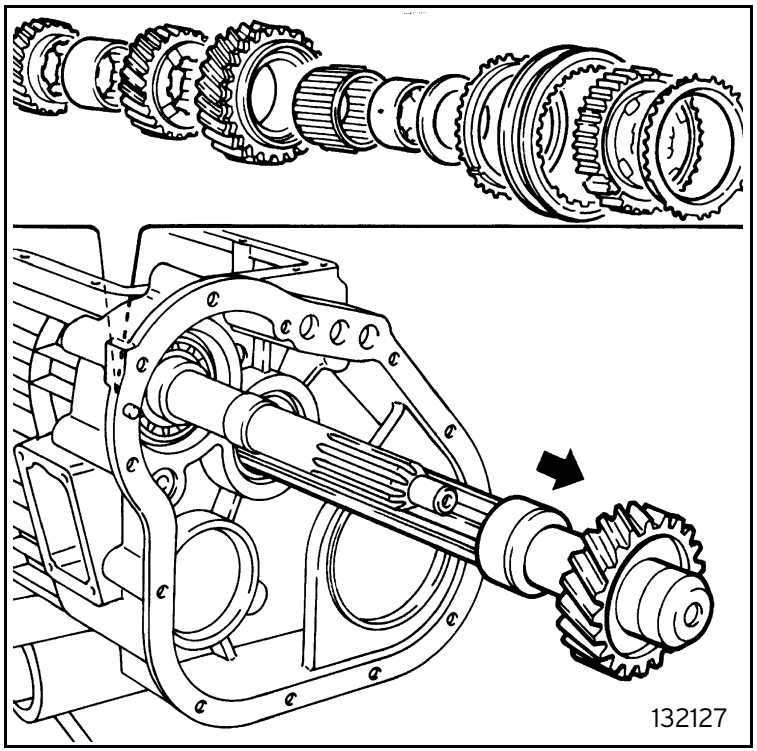

Fig. 27

Reversing shaft and main shaft removal

- remove the pressure screw that secures the reversing shaft (figure 28);
- using tool 961195024 remove the reversing shaft, at the same time recover the gear from the side opening (figure 29);

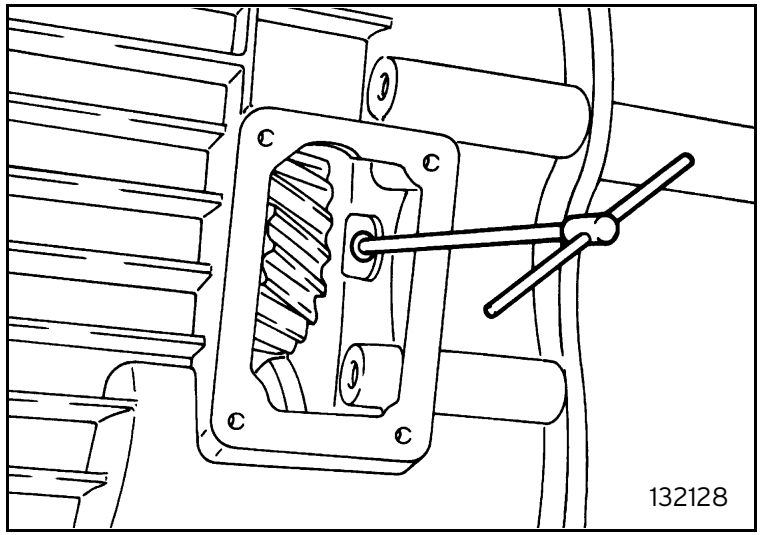

Fig. 28

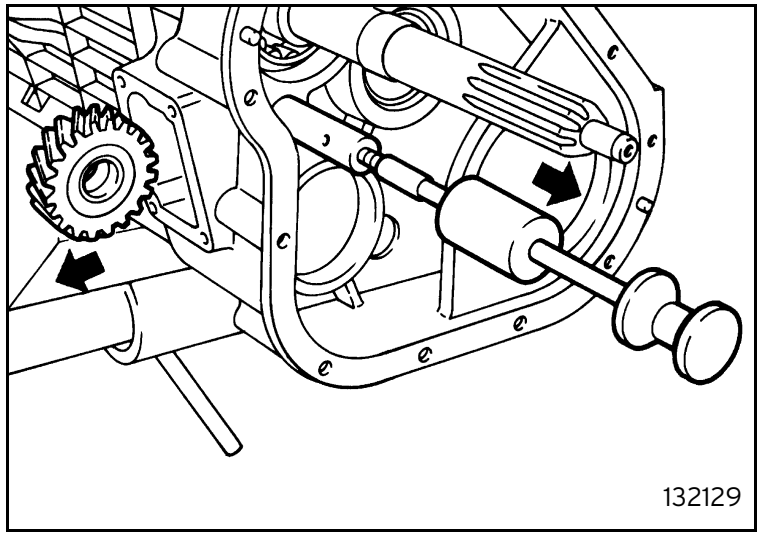

Fig. 29

- remove the circlip that holds the main shaft bearing on the clutch side (figure 30);
- with a suitable punch carefully knock and remove the main shaft bearing, clutch side (figure 31);

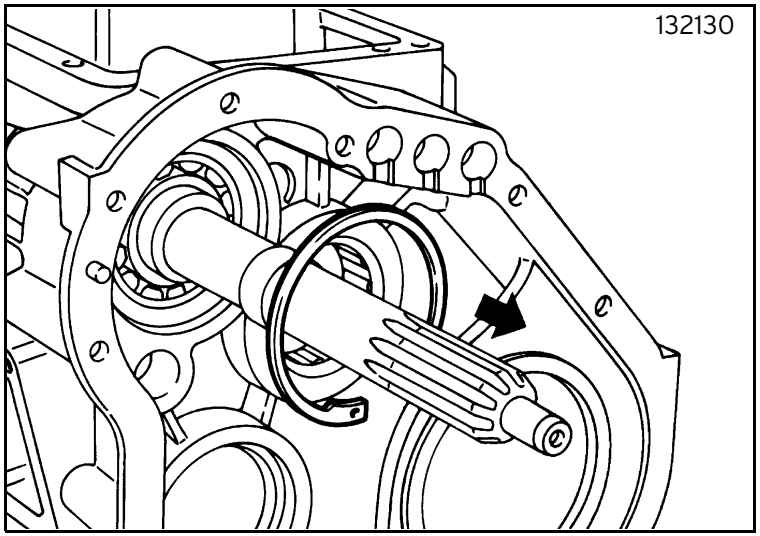

Fig. 30

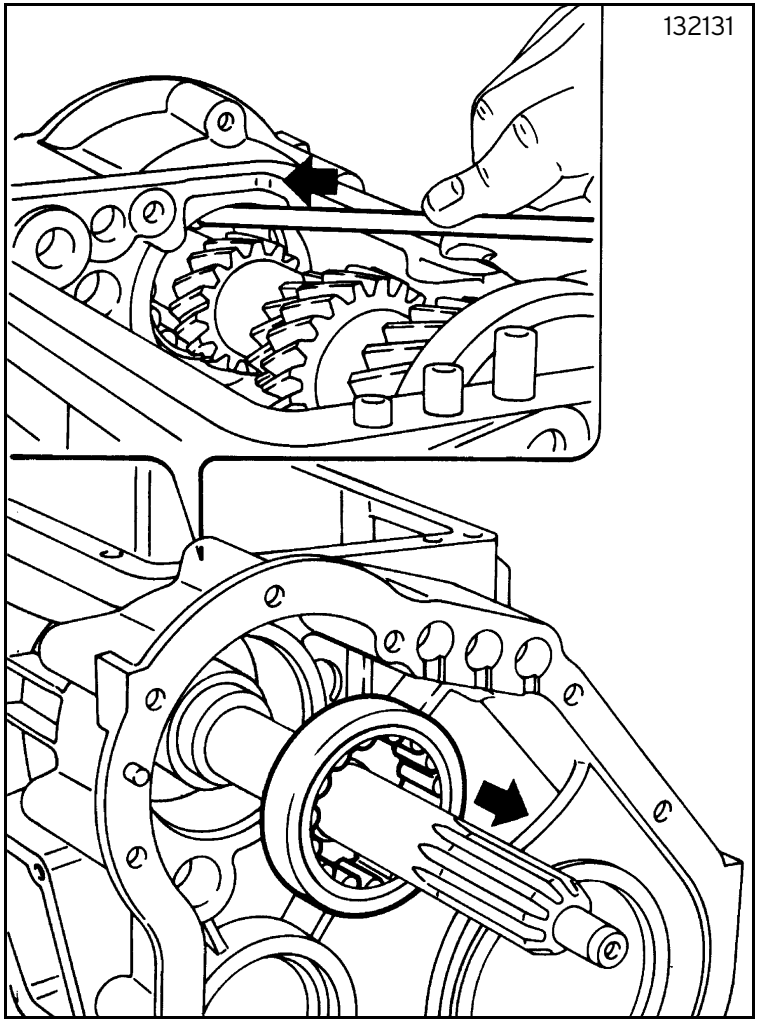

Fig. 31

- free the main shaft from the bearing on the oil pump side, slope it and remove it upwards (figure 32);

Be cautious during this operation due to the weight and shape of the components to be handled.

- unscrew the four nuts, remove the flange and then the main shaft oil seal ring (figure 33);

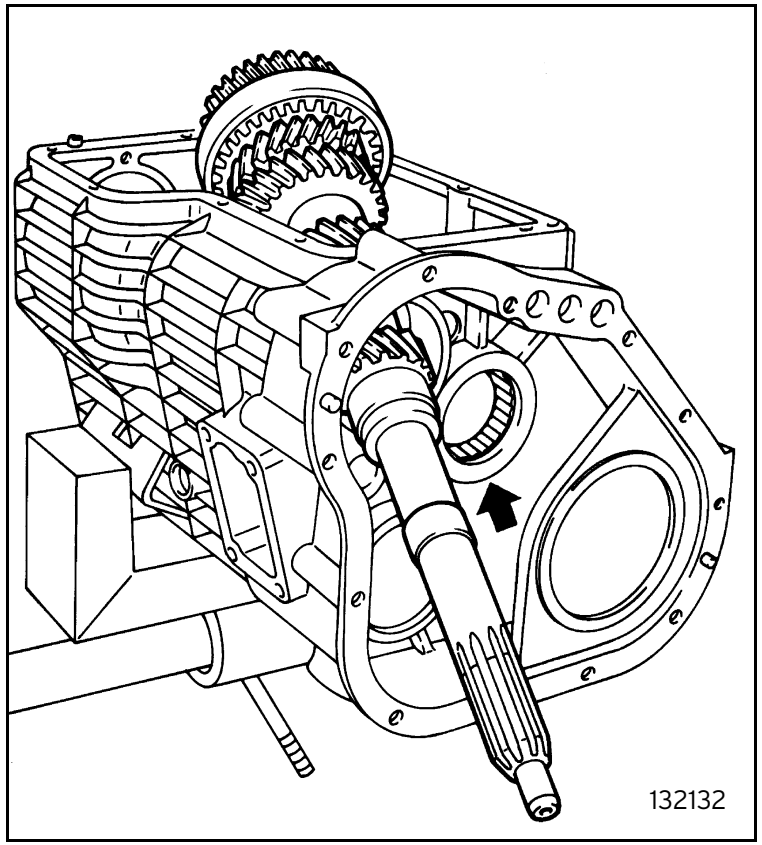

Fig. 32

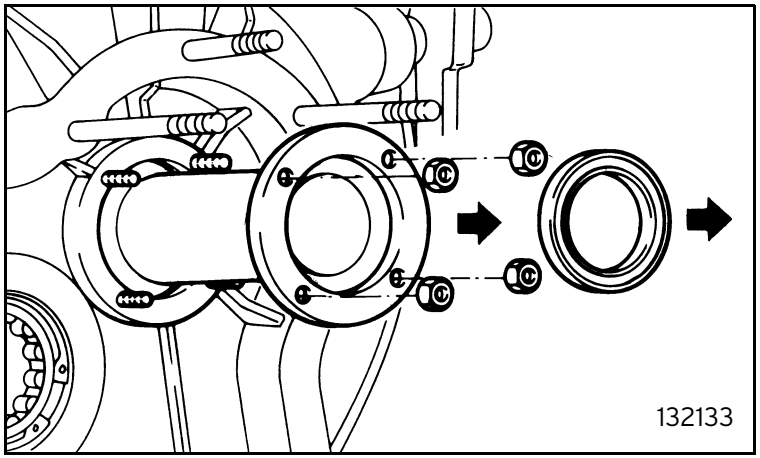

Fig. 33

Bearings removal

- remove the remaining bearings from the gear housing: main shaft oil pump side (A), countershaft oil pump side (B); front propeller shaft oil pump side (C); countershaft clutch side (D), final transmission shaft (E); front propeller shaft clutch side (F) (figure 34);
- remove the remaining bearings from the clutch cover: countershaft (G), final transmission shaft (H), front propeller shaft (I) (figure 35);

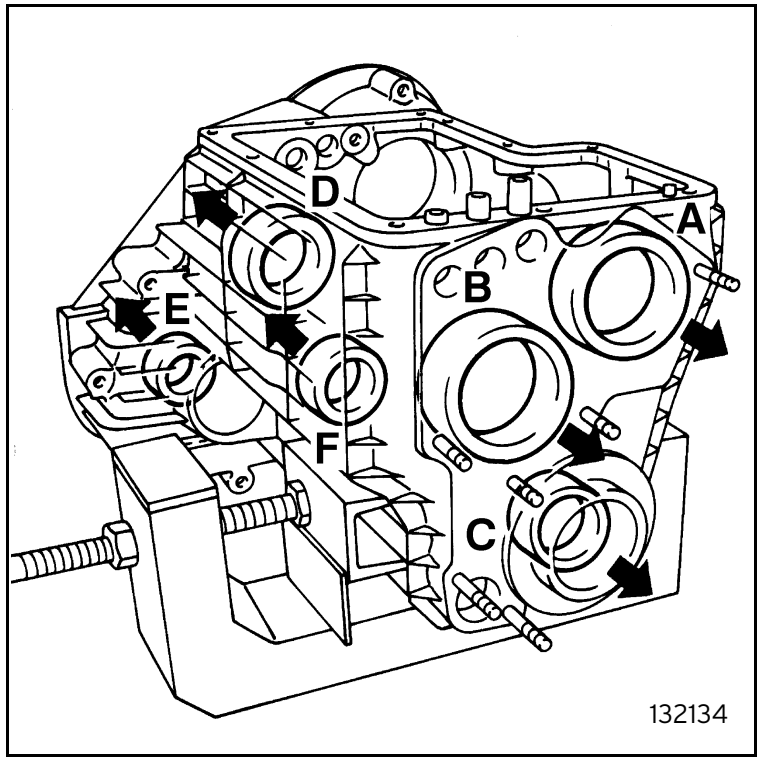

Fig. 34

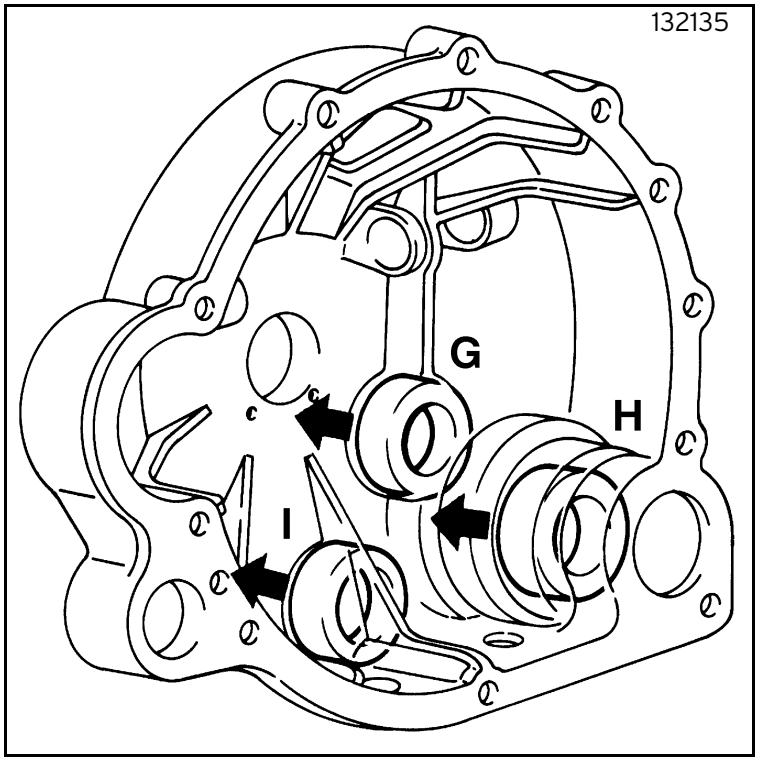

Fig. 35

CHECKS

Main shaft

Strip down the main shaft as follows:

- carefully take off all the main shaft components (figure 36);
- clean all the components well;
- check that the gear teeth profile surfaces are not chipped or scored and that the side surfaces have no worn or grooved areas, check the shim adjustments have no scores;
- check that the interlocking teeth of the sleeves and idle gears have no burrs; and that sliding between hub and sleeves is without backlash or crawling; check the springs, synchroniser shoes and relevant sliding surfaces are intact;
- check the perfect condition of the roller cages and that their tracks are not burnished or seized;
- check that the threads and splined profiles of the shaft have no dents or grooving;
- if any of these faults are found, restore or replace the damaged parts;

If a gear is replaced (the whole shaft for I or RM), the corresponding gear on the countershaft must also be replaced.

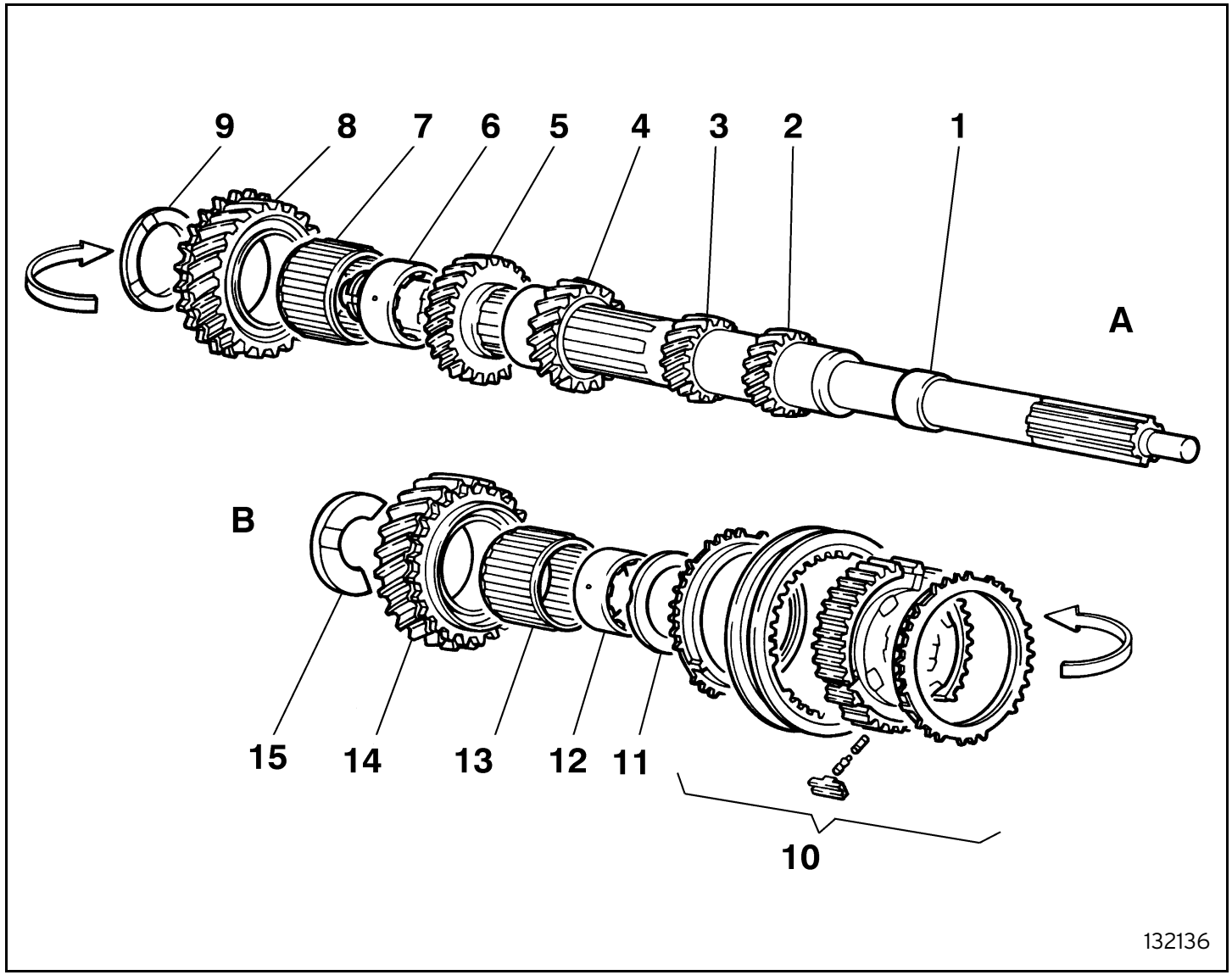

A: clutch side
B: oil pump side

1 Shaft
2 Reverse gear (RM)
3 1st gear (I)
4 2nd gear (II)
5 3rd gear (III)
6 Sleeve
7 Roller cage
8 4th gear (IV)
9 Shim (shim thickness S = 3 mm)
10 4th and 5th gear (IV and V) synchroniser
11 Shim (shim thickness S = 3 mm)
12 Sleeve
13 Roller cage
14 5th gear (V)
15 End pack shim (shim thickness S = 6 mm)

Fig. 36 - Gearbox main shaft

Reassemble the main shaft as follows:

- assemble the IV and V synchroniser inserting in each of the three hub housings simultaneously and in this order : spring (1), pin (2) and shoe (3) inserting the engagement sleeve in centred position to hold the components in place (figure 37): fit the toothed ring on each side;

The engagement sleeve does not have a specific direction of rotation.

- in this sequence fit onto the shaft: II and III gears, sleeve and IV gear cage, IV gear and shim adjustment, the previously assembled synchroniser, sleeve and V gear cage, and final shim adjustment; temporarily screw on the clamping nut to avoid accidental dismantling;

The sleeves are to be fitted with the lubrication holes corresponding to the delivery holes on the shaft (figure 38).

Shim adjustments are to be fitted with the grooves facing the relevant working surface (figure 39).

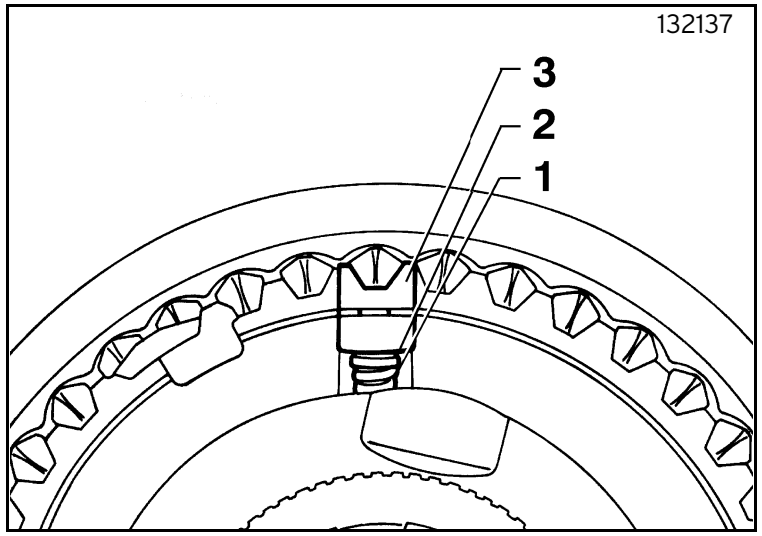

Fig. 37

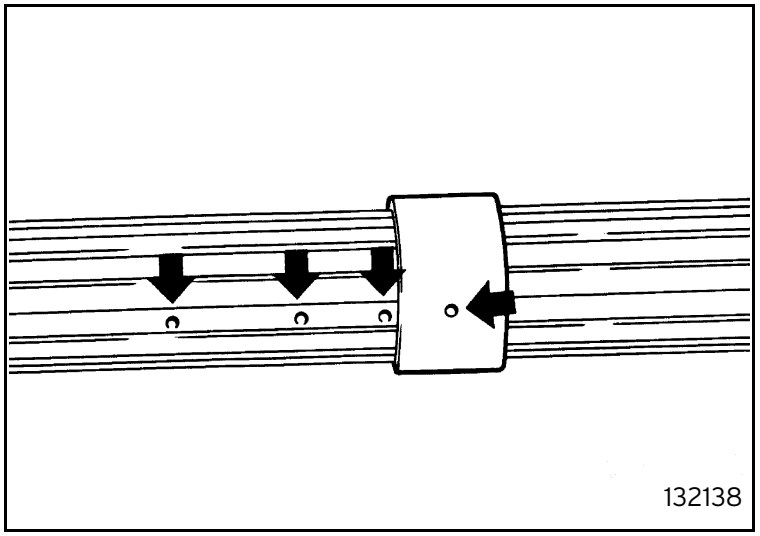

Fig. 38

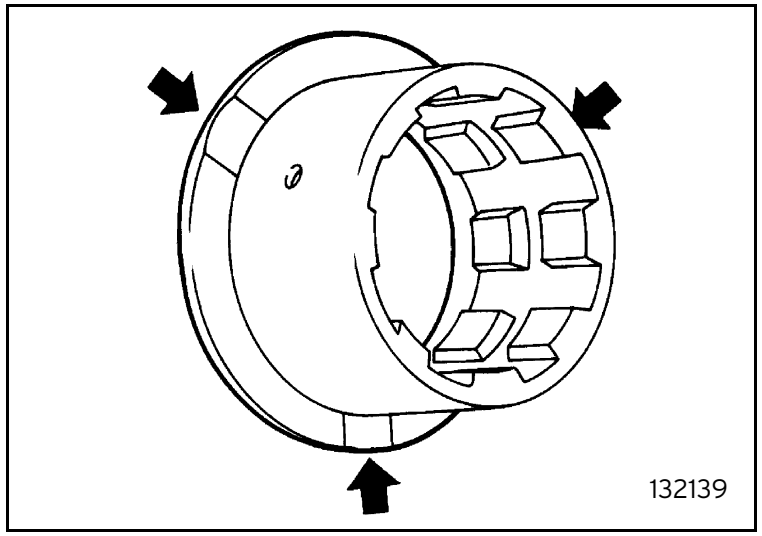

Fig. 39

Countershaft

Strip down the countershaft as follows:

- remove all the components of the countershaft with care (figure 40);
- clean all the components well;
- check that the gear teeth profile surfaces are not chipped or scored and that the side surfaces are not worn or grooved, check the shim adjustments are not scored;
- check that the engaging teeth of the sleeves and idle gears have no burrs, that sliding between hub and sleeves takes place without incorrect backlash or crawling; check that the springs and shoes of the synchronisers and relevant sliding surfaces are intact;
- check the perfect condition of roller cages and that the tracks are not burnished or seized;
- check that the threads and splined profiles of the shaft have no dents or grooving;
- if faults are found, restore or replace the damaged parts;

If a gear is changed, the corresponding gear on the main shaft must also be replaced (the whole main shaft in the case of I or RM).

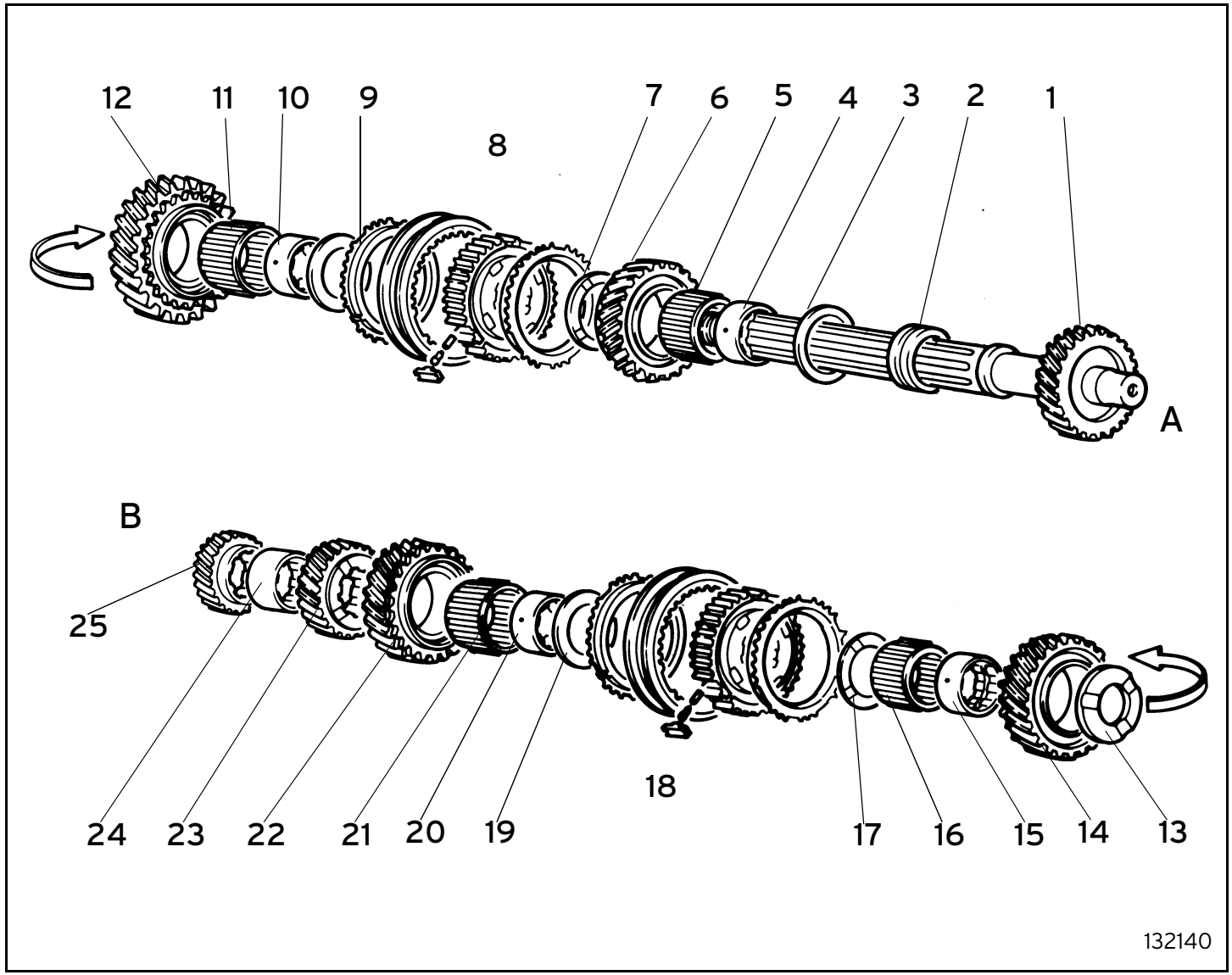

Fig. 40 - Gearbox countershaft

A: clutch side
B: oil pump side

1 Shaft with final transmission gear
2 Bearing sleeve on box
3 Beginning of pack shim (shim thickness S=6 mm)
4 Sleeve
5 Roller cage
6 Reverse gear (RM)
7 Shim
8 1st gear (I) and reverse (RM) synchroniser
9 Shim
10 Sleeve
11 Roller cage
12 1st gear (I)
13 Shim
14 2nd gear (II)
15 Shim
16 Roller cage
17 Shim
18 2nd (II) and 3rd (III) gear synchroniser
19 Shim
20 Sleeve
21 Roller cage
22 3rd gear (III)
23 4th gear (IV)
24 Sleeve
25 5th gear (V)

Reassemble the countershaft as follows:

- assemble the I and RM synchroniser inserting in each of the three hub housings at the same time and in this sequence: spring (1), pin (2) and shoe (3) insert the engagement sleeve in centred position to hold the components in place (figure 41): fit the toothed ring on each side;

The engaging sleeve does not have a specific direction of rotation.

- repeat the procedure for the II and III synchroniser;
- in this sequence insert onto the shaft: sleeve and RM gear cage, RM gear and shim adjustment, the previously assembled I and RM synchroniser, sleeve and I gear cage, shim adjustment and I gear, sleeve and II gear cage, II gear and shim adjustment, the previously assembled II and III synchroniser, sleeve and III gear cage, shim adjustment and III gear, IV gear, spacer and V gear; temporarily screw the locking nut to avoid accidental dismantling;

The sleeves are to be fitted with the lubrication holes corresponding to the delivery holes on the shaft (figure 42).

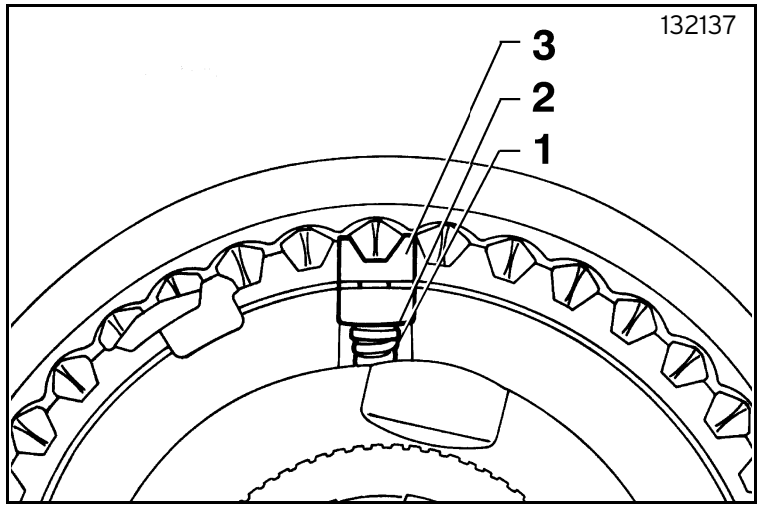

Fig. 41

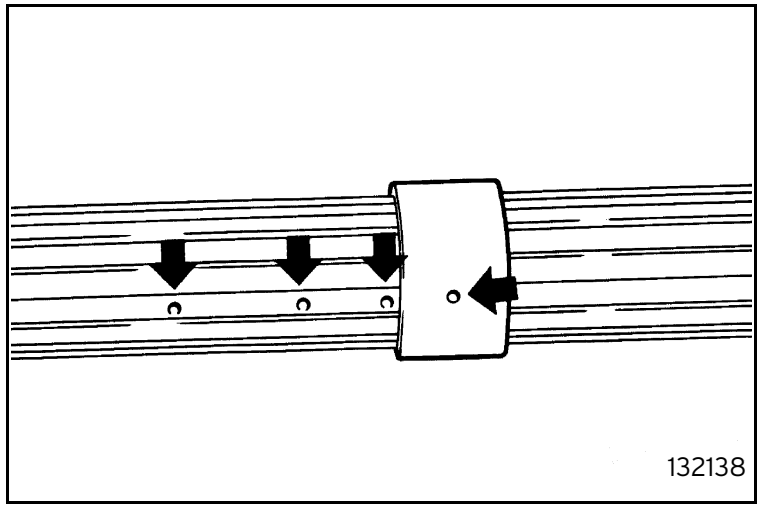

Fig. 42

Shim adjustments are to be fitted with the grooves facing the relevant working surface (figure 43).

Transmission shaft

- with tool 962495037 unscrew the ring nut securing the transmission shaft gear (figure 44); to disassemble take out the gear and the bearing track;
- check that the components are intact and replace where necessary;
- to reassemble, screw on the ring-nut with tool 962495037 and tighten to the specified torque:

transmission shaft ring-nut: 180 Nm

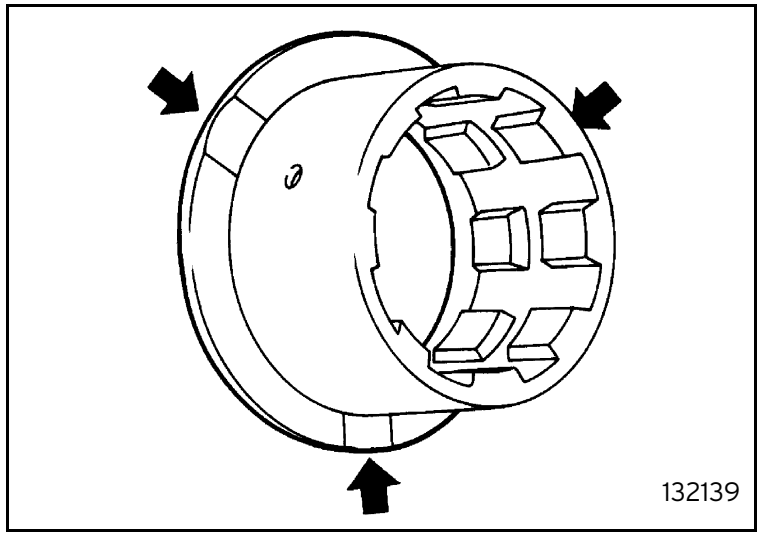

Fig. 43

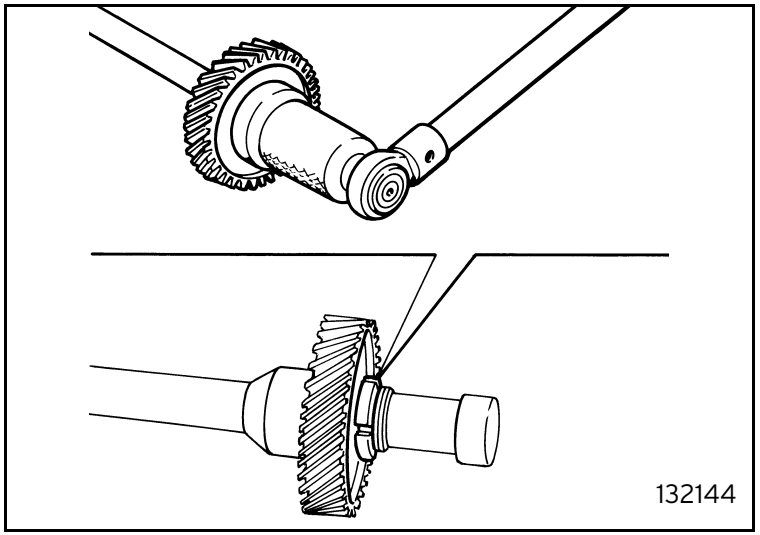

Fig. 44

Idle gears clearance check

Check the end float of the idle gears on the main shaft and countershaft, proceeding as follows:

- assemble the complete gear pack at the bench as already described;
- tighten the nut to the specified torque;

main shaft nut: 230 Nm
countershaft nut: 230 Nm

- check (figure 45) that the end float of each idle gear is within the specified values;

specified clearance: 0.15 to 0.25 [mm]

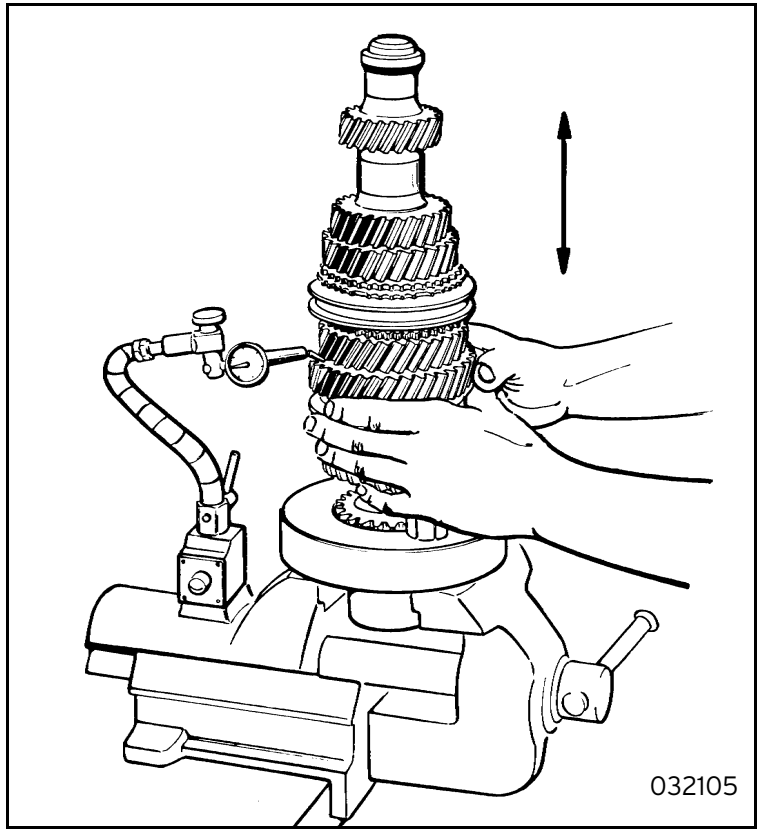

Fig. 45

Oil pump

Disassemble the oil pump as follows:

- unscrew the securing screws, remove the oil pump cover and take out the gears (figure 46);
- clean all components thoroughly; check that the spray nozzles (A) and channels are free of incrustations; check that the tooth profile surfaces are not chipped or scored; check that the cover and the housing show no wear or grooving, otherwise restore or replace damaged parts;
- to reassemble follow the disassembly procedure in reverse order, and check that the notches (arrows) on the cover and the housing coincide (figure 47);

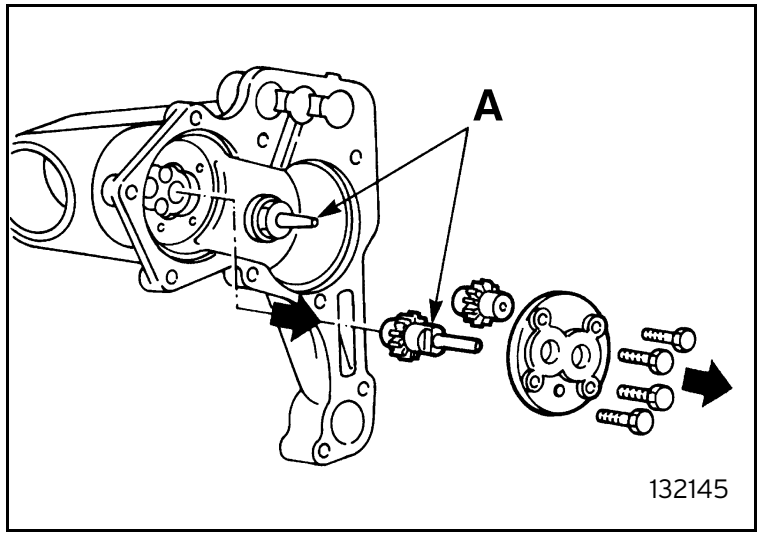

Fig. 46

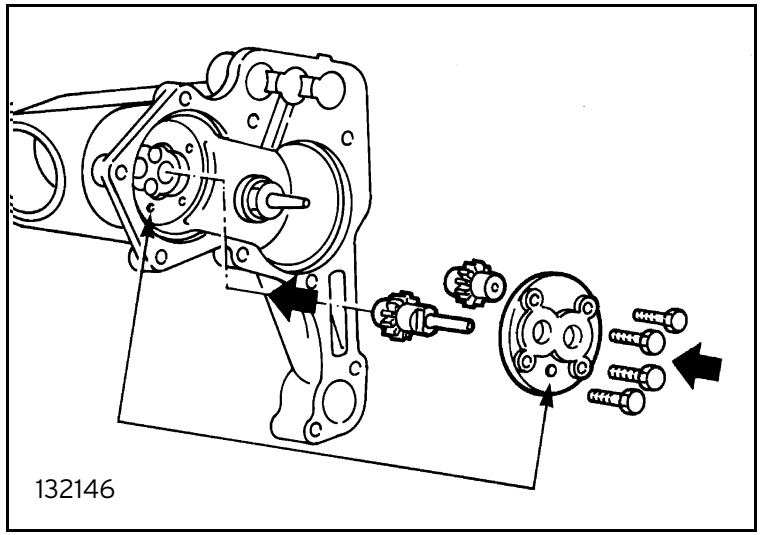

Fig. 47

- remove the silent-block and check that the plug is intact and the disks are not deformed, otherwise restore or replace damaged parts (figure 48);

Verifications and checks on other components

- carefully clean the bearings; check that the tracks and rolling parts are in perfect condition, with no micro cracks, chipping or blue coloured zones: otherwise replace the whole bearing;

Bearings to be reused are to be lightly lubricated with the specified oil and kept sheltered from dust.

Never dry washed bearings with a jet of compressed air: they could disintegrate with danger to persons or in any case damage beyond repair.

- carefully clean the box and covers, removing all traces of sealant paste, check there are no cracks; check that the sealing surfaces are intact, check the condition of threads and stud bolts: where necessary replace damaged components.
- check that the rods have no traces of seizing and that the spring and fork working seats are not damaged; check that the forks are not bent or worn on the working surfaces; check that the ends of the fork control levers have no signs of upsetting or wear: otherwise replace damaged components.

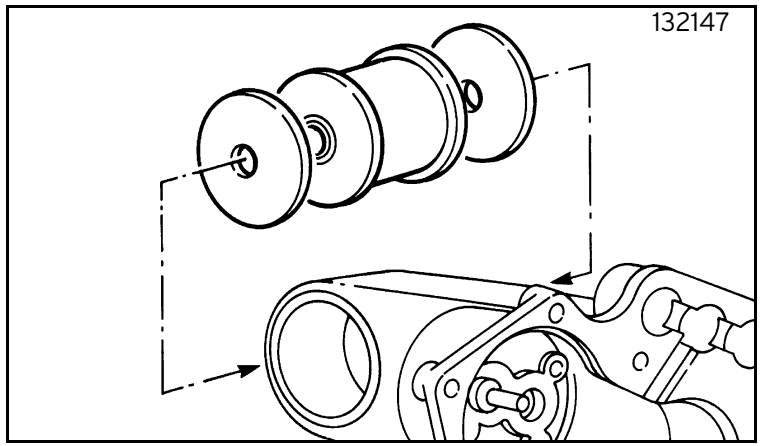

Fig. 48

REASSEMBLY

Bearings reassembly

Proceed as follows:

- fit the gear housing bearings: main shaft oil pump side (A), countershaft oil pump side (B); front propeller shaft oil pump side (C); countershaft clutch side (D), final transmission shaft (E); front propeller shaft clutch side (F) (figure 49);
- fit the clutch cover bearings: countershaft (G), final transmission shaft (H), front propeller shaft (I) (figure 50);

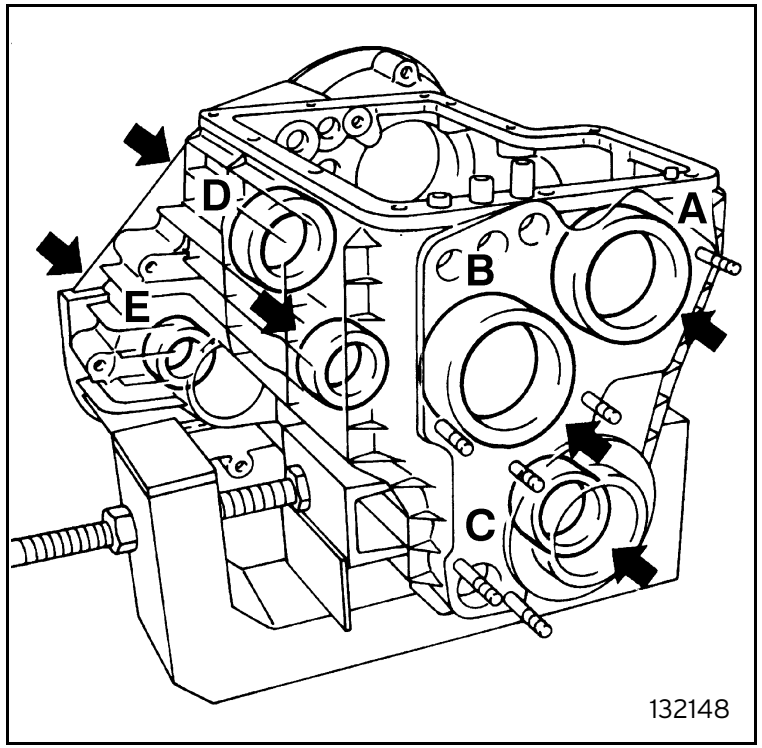

Fig. 49

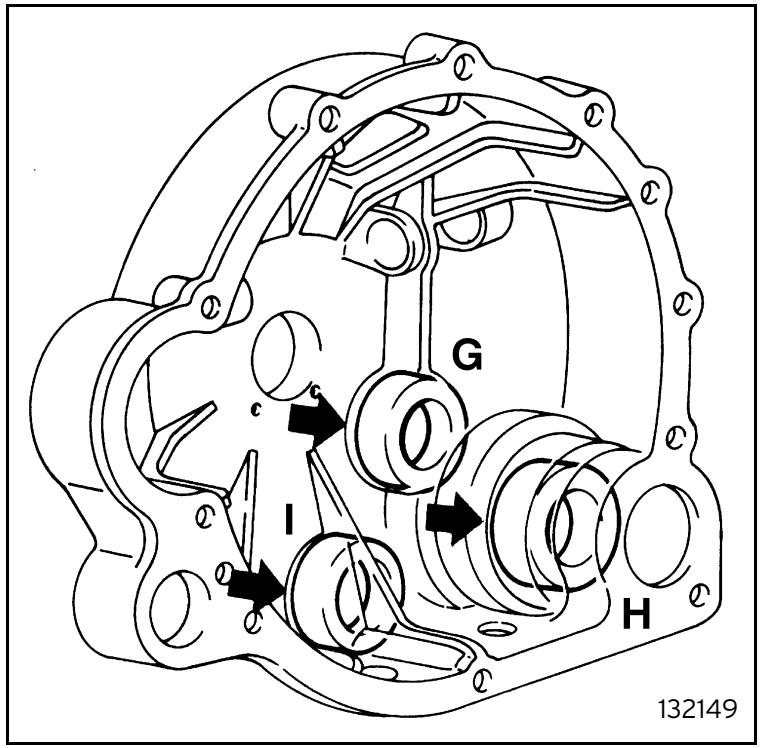

Fig. 50

- fit the main shaft oil seal ring in the seat on the sleeve, fit the sleeve, tighten the securing nuts to the specified torque (figure 51);

flange nut: 9.3 Nm

Attain to the position of the ring: A gearbox side, B clutch side.

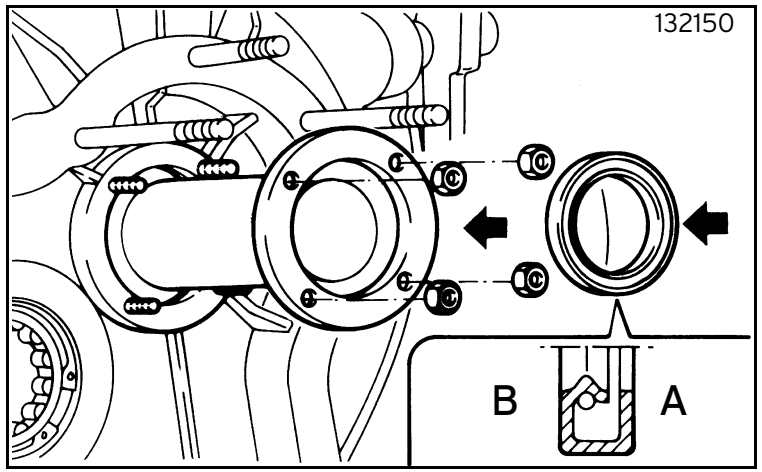

Fig. 51

Reversing shaft and main shaft reassembly

- fit the reversing shaft and at the same time the relevant gear from the side opening (figure 52);

Attain to the position of the reversing gear: A oil pump side, B clutch side.

- fix the pressure screws (figure 53);

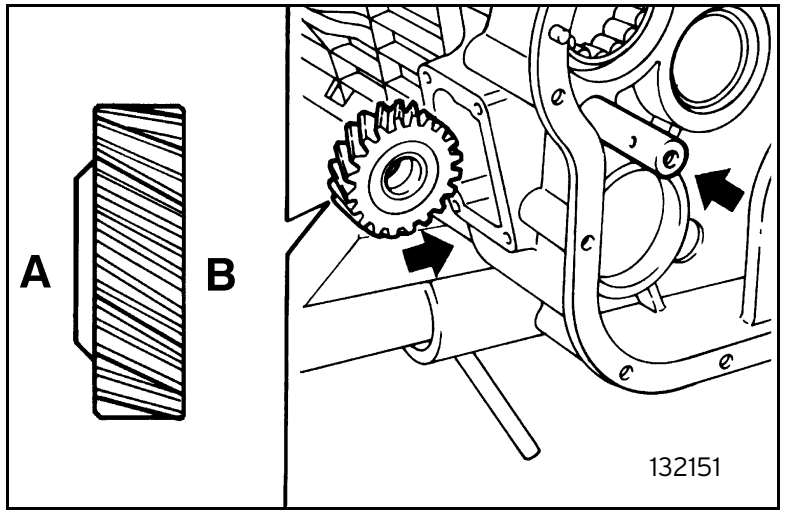

Fig. 52

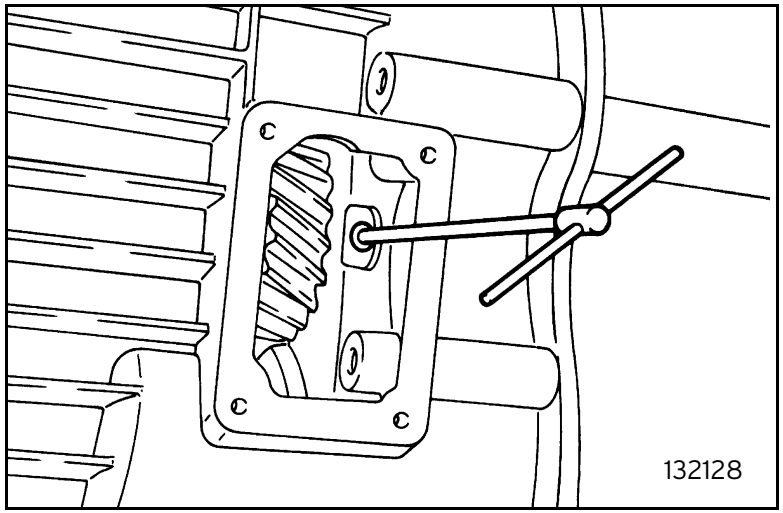

Fig. 53

- from above, insert the previously assembled main shaft into the gear housing (figure 54);

Operate cautiously due to the weight and shape of the components to be handled.

- secure the shaft to the gear housing wall with two straps (arrow) to allow the passage of the countershaft components (figure 55);

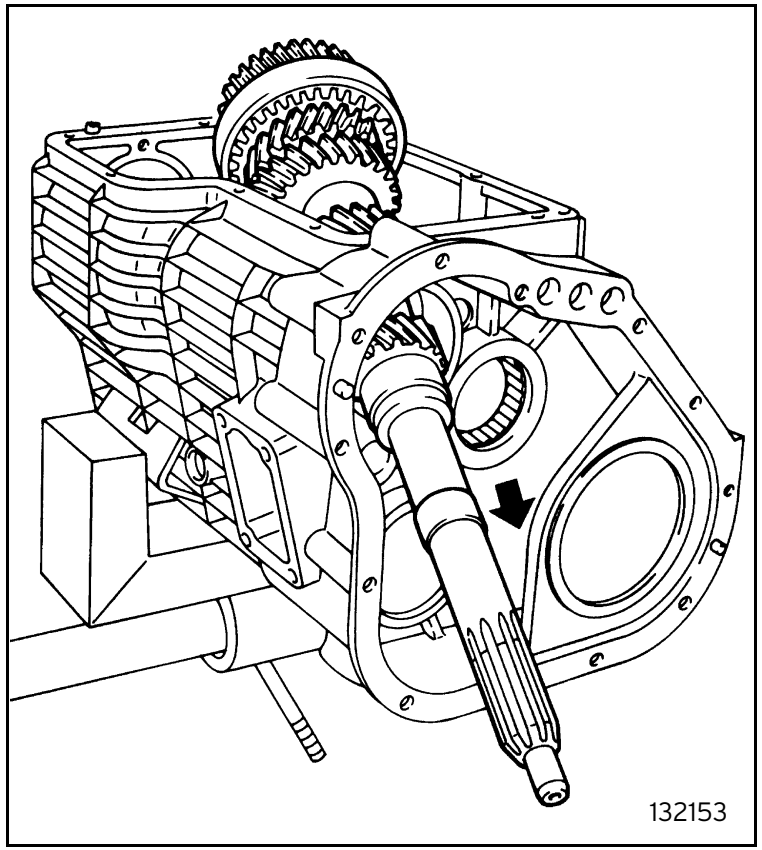

Fig. 54

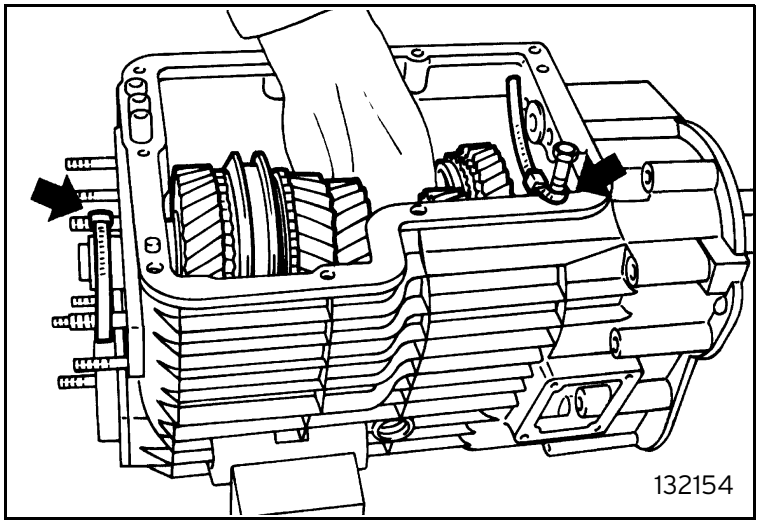

Fig. 55

Countershaft reassembly

- strip down the previously assembled countershaft, maintaining the assembly order, then insert the countershaft into the gear housing and progressively fit on all the components in the sequence given in the CHECKS section (figure 56);

Operate cautiously due to the weight and shape of the components to be handled.

Shim adjustments are to be fitted with the grooves facing the working surface on the gear.

engage the countershaft on the bearing, oil pump side, remove the straps and bring the main shaft close, engaging it in the relevant bearing on oil pump side and bring the relevant gears to coincide;

- fit the main shaft bearing, clutch side, then fit the circlip (figure 57);

Attain to the direction of the circlip ends indicated for easier future removal.

rotate the two shafts to settle the various parts and check that rotation is free and uniform;

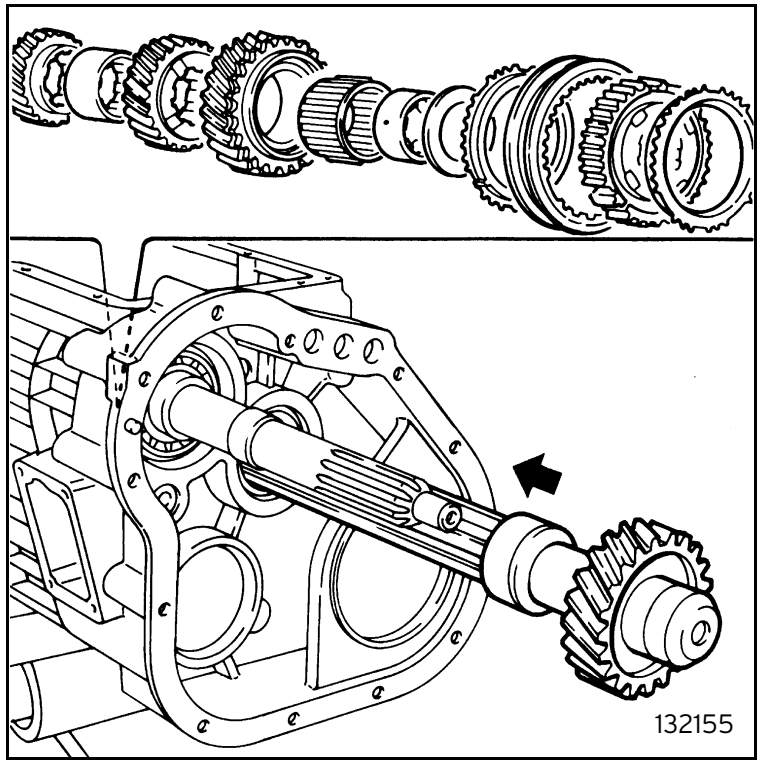

Fig. 56

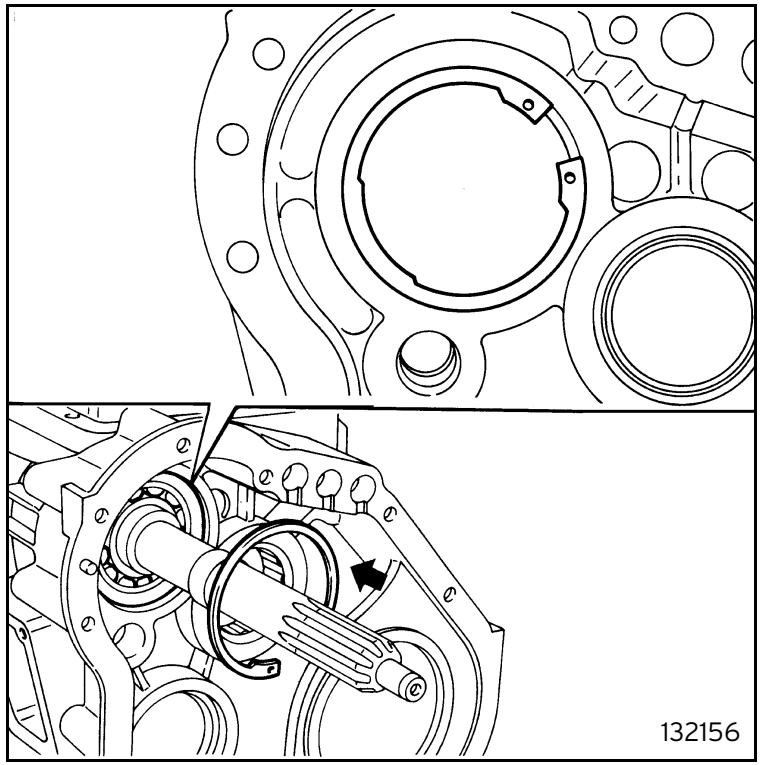

Fig. 57

- fit the transmission shaft and at the same time its gear, then fit the transmission shaft bearing (figure 58);
- insert the final transmission with the viscous joint (A) and the front driving shaft (B) (figure 59);

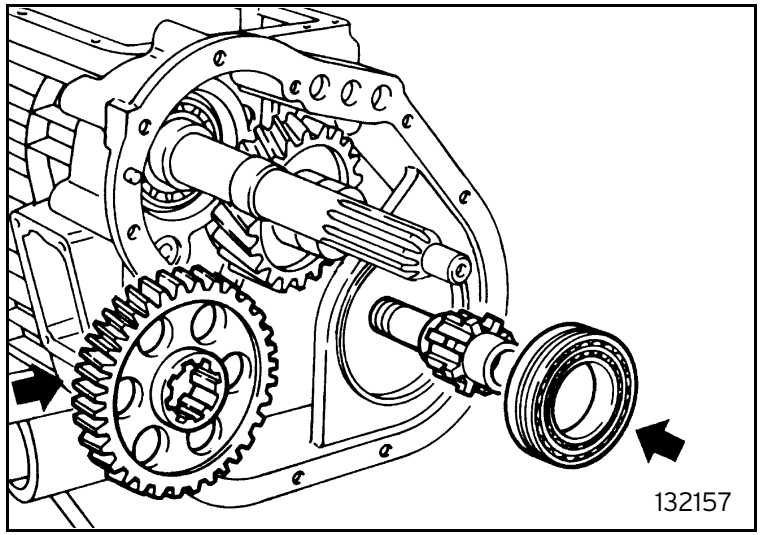

Fig. 58

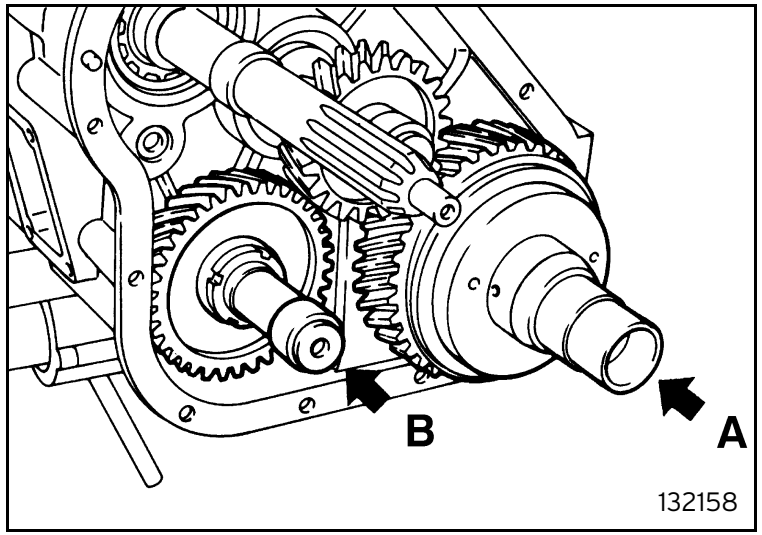

Fig. 59

- manually engage two gears through their engaging sleeves, then using tool 962495037 tighten the main shaft locking nut oil pump side (A) and countershaft locking nut oil pump side (B). Tighten both nuts to the specified torque (figure 60);

  main shaft nut: 230 Nm

  countershaft nut: 230 Nm

  caulk both nuts with a punch;
- using tool 962495025 tighten the transmission shaft securing nut and lock it (figure 61) to the specified torque;

  transmission shaft ring nut: 180 Nm

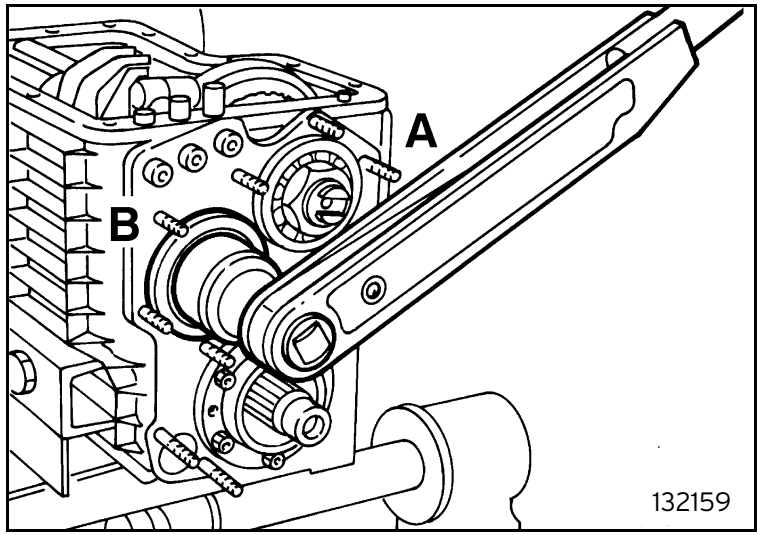

Fig. 60

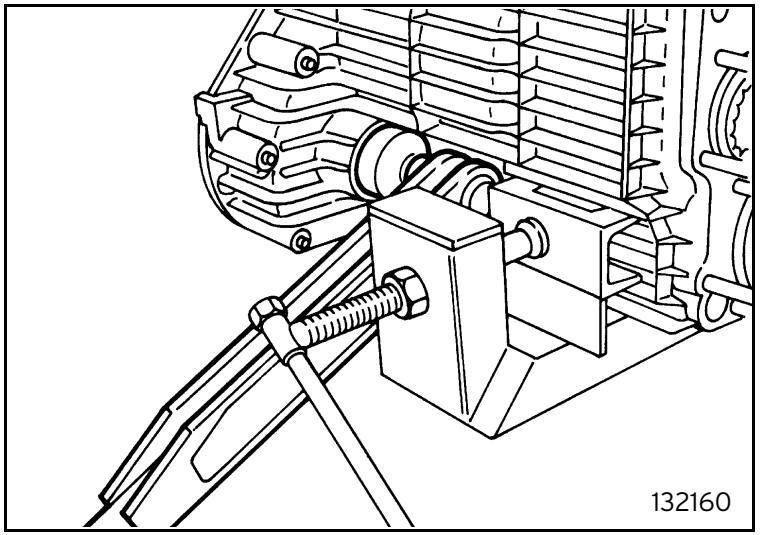

Fig. 61

- fit the cover then fit the circlip (figure 62);

Gear engagement device reassembly
- fit the I/RM control rod with the ratchets and fork (figure 63);

⚠ Raise the I/RM rod control ratchet to insert the II/III rod ratchet screw.

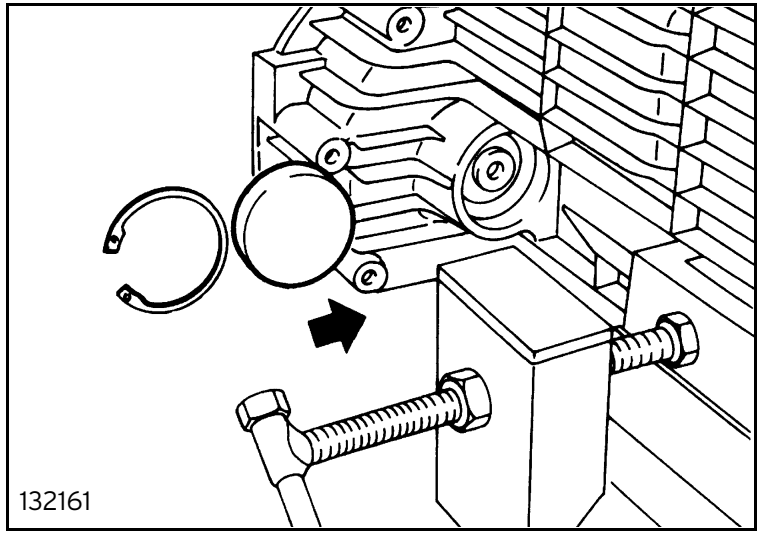

Fig. 62

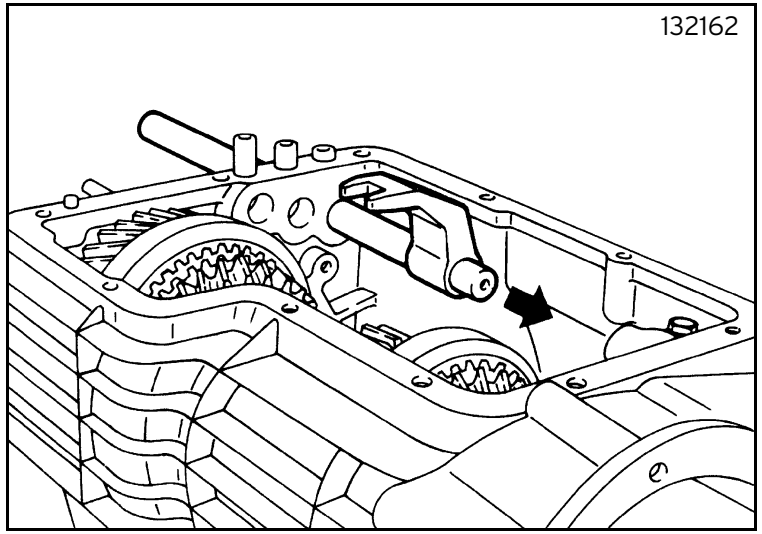

Fig. 63

- fit the pins that prevent simultaneous engagement of two gears into their seat, then fit the II/III control rod with its ratchet and fork (figure 64);
- fit the IV/V control rod with its ratchet and fork, then screw, but do not tighten, the three ratchet and fork securing screws, taking care to centre the respective grooves on the rods (figure 65);

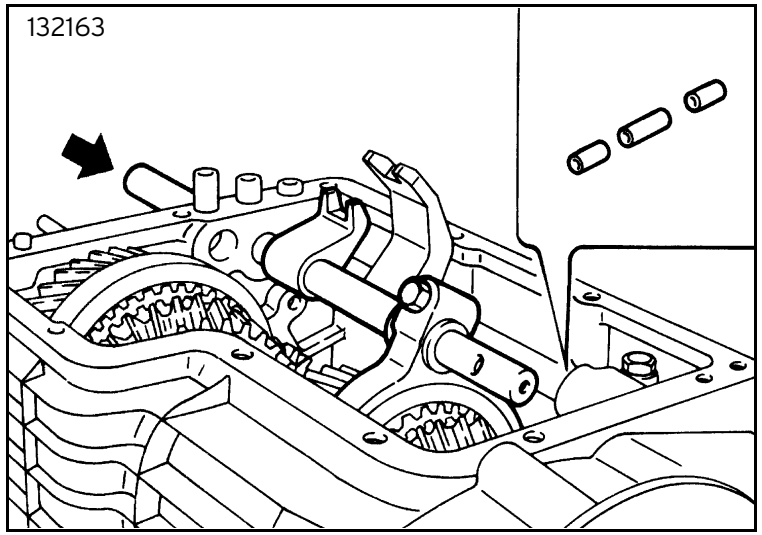

Fig. 64

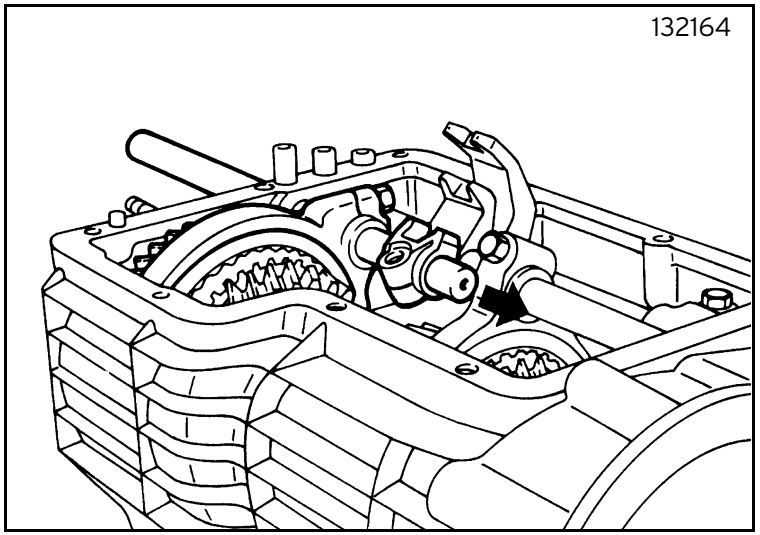

Fig. 65

- fit the springs and rod retaining balls (figure 66);

Covers and accessories reassembly

- spread Loctite 518 sealant on the sealing surfaces, then fit the gearbox oil pump body and tighten the securing nuts to the specified torque (figure 67);

gearbox oil pump nuts: 29.4 Nm

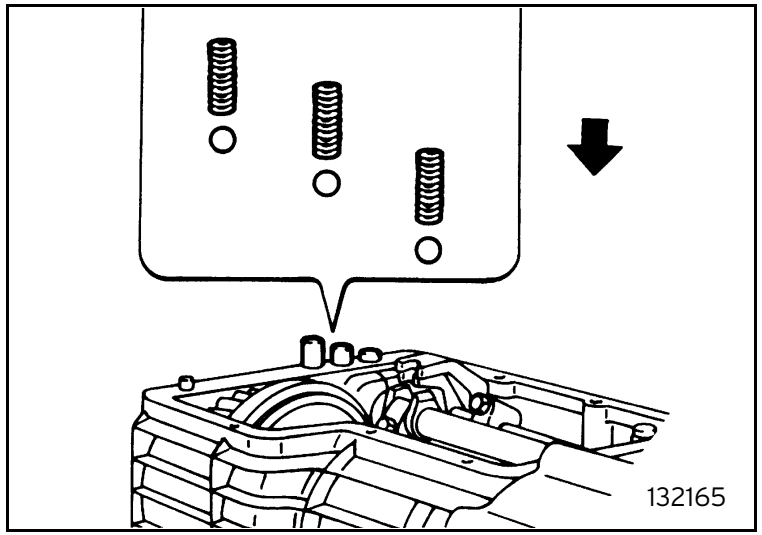

Fig. 66

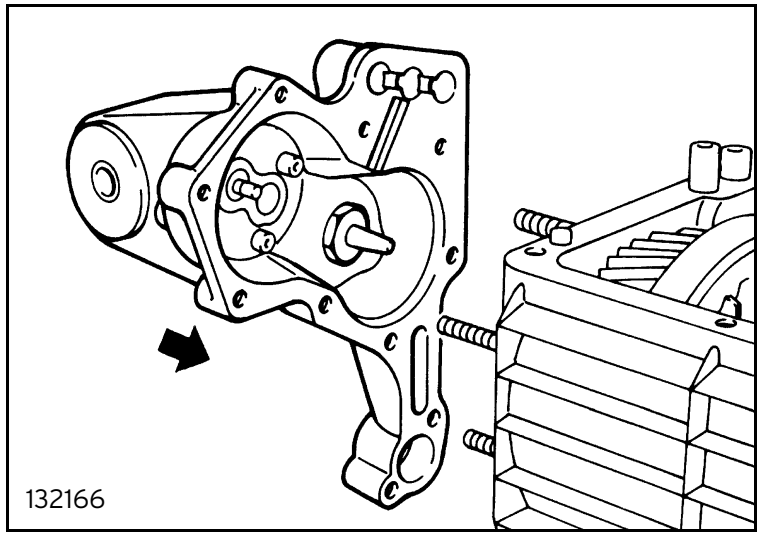

Fig. 67

- fit the gearbox oil filter with the two O-rings and tighten the securing nuts to the specified torque (figure 68);
  gearbox oil filter screws: 29.4 Nm

Carefully lubricate the O-rings and fit the filter with caution so as not to damage them.

- fit the oil seal ring and circlip (figure 69);

Attain to the ring position: A gearbox side, B external side.

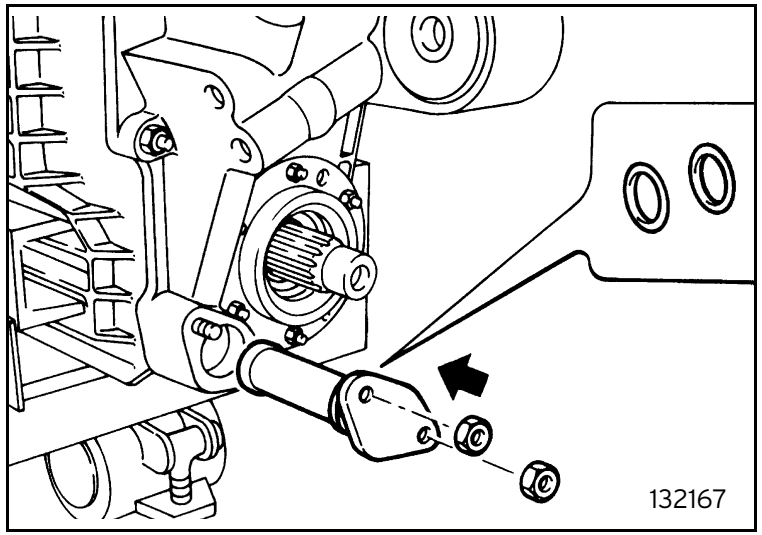

Fig. 68

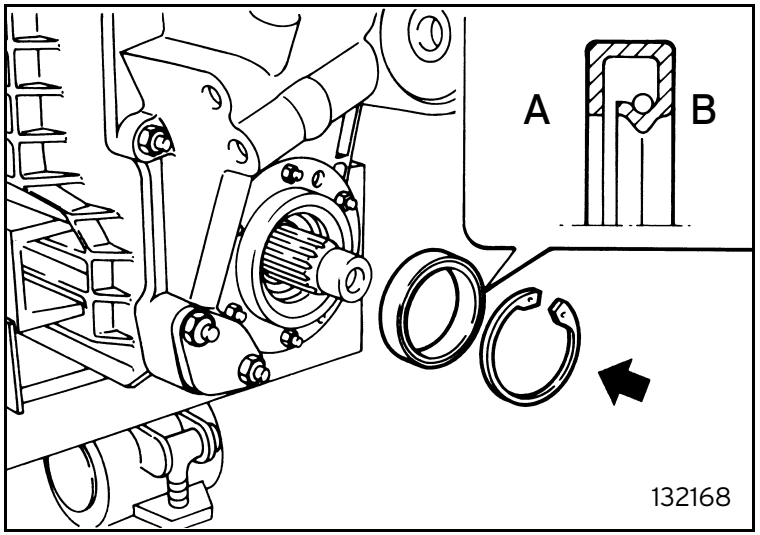

Fig. 69

- fit the front output flange and tighten the locking nut to the specified torque (figure 70);

  front output flange nut: 176 Nm

  caulk the nut with a punch;

- spread Loctite 518 sealant on the sealing surfaces then fit the clutch cover and tighten the securing bolts to the specified torque (figure 71);

  clutch cover nuts: 25 Nm

⚠ Pay attention to the nut inside the upper cover (A) and that inside the side cover (B).

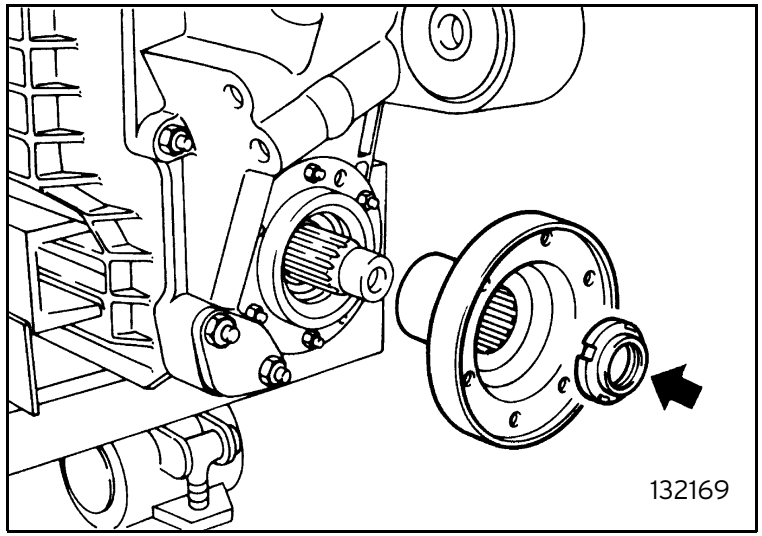

Fig. 70

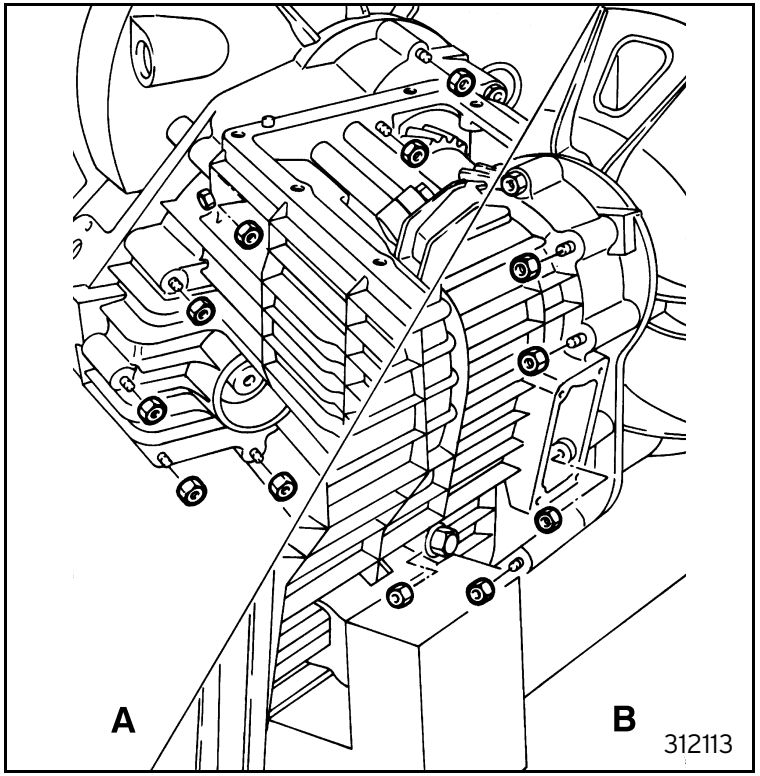

Fig. 71

- loosen the securing screws of the two forks, then manually engage two gears through the relevant control forks to prevent the shafts from rotating; using tool 962495038 tighten the rear driving shaft bearing ring nut to the specified torque (figure 72);

  bearing ring nut: 245 Nm

  reposition the control forks, then fit the oil seal circlip and the oil seal ring;

Attain to the ring position: A gearbox side, B external side.

- spread Loctite 518 sealant on the sealing surfaces then fit the side cover tightening the securing screws (figure 73);

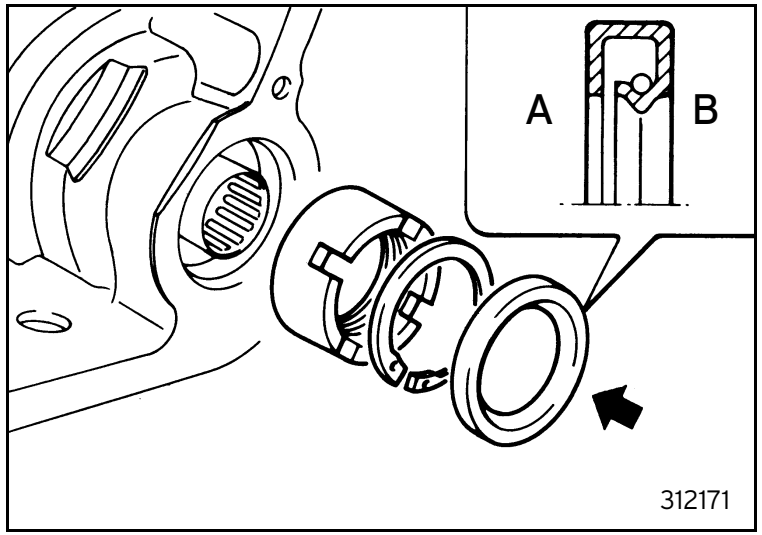

Fig. 72

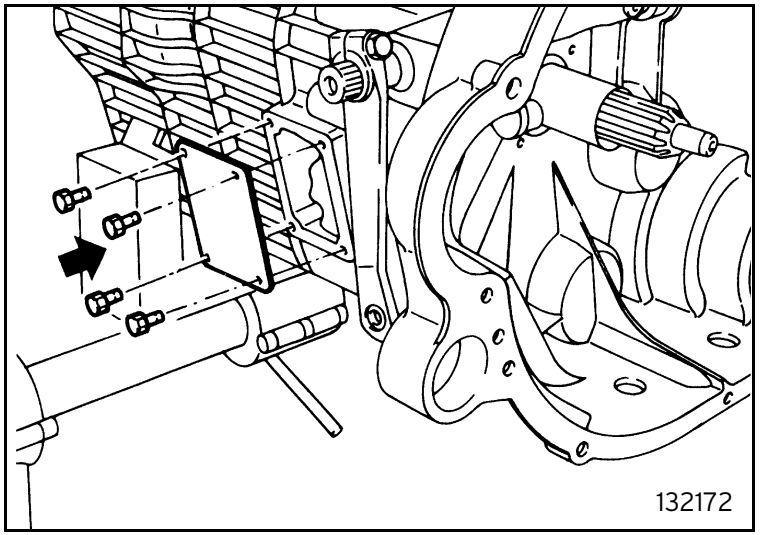

Fig. 73

Gear engagement internal devices adjustment

- fit tool 962495019 to compress the rod restraint springs and tool 962495032 for ratchet centring, adjusting the position if it is difficult to insert the tool (figure 74);
  adjust the clearance between the ratchets to the specified value:

  value A: 2.5 [mm]
  value B: 1.9 [mm];

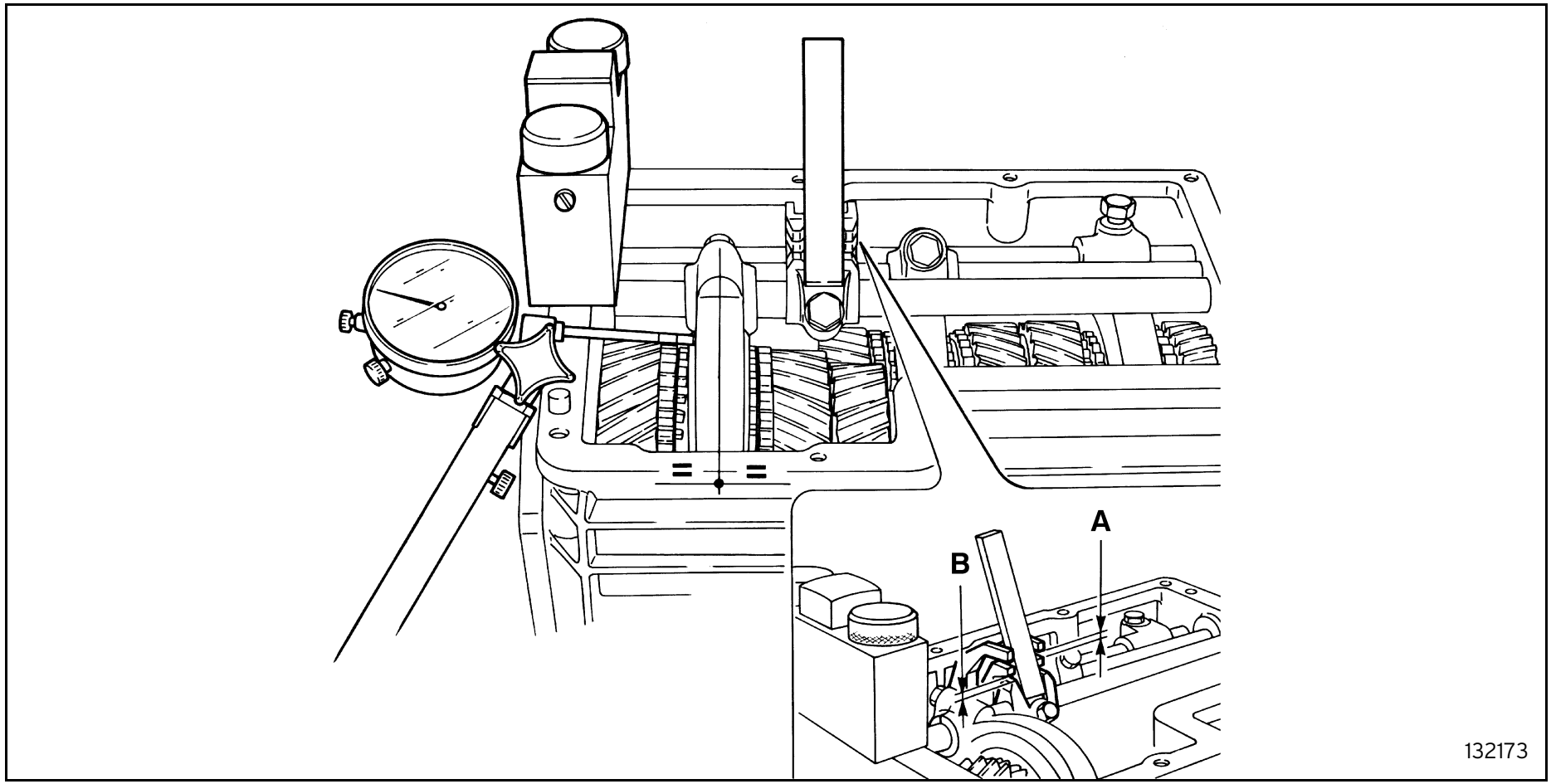

Fig. 74

at the end of the operation apply Loctite 524A42 medium thread stop to the ratchet securing screws and tighten to the specified torque;

ratchet screws: 29.4 Nm

using a dial gauge position the relevant fork on the centre line of each gear engagement sleeve;
repeat this operation for all the forks;
at the end of the operation apply Loctite 52A42 medium thread stop to the fork securing screws and tighten to the specified torque;

fork screws: 29.4 Nm

after terminating the operation remove the tools;

Completion

- fit the turret support frame and tighten the securing bolt to the specified torque (figure 75);

turret support frame bolt: 140 Nm

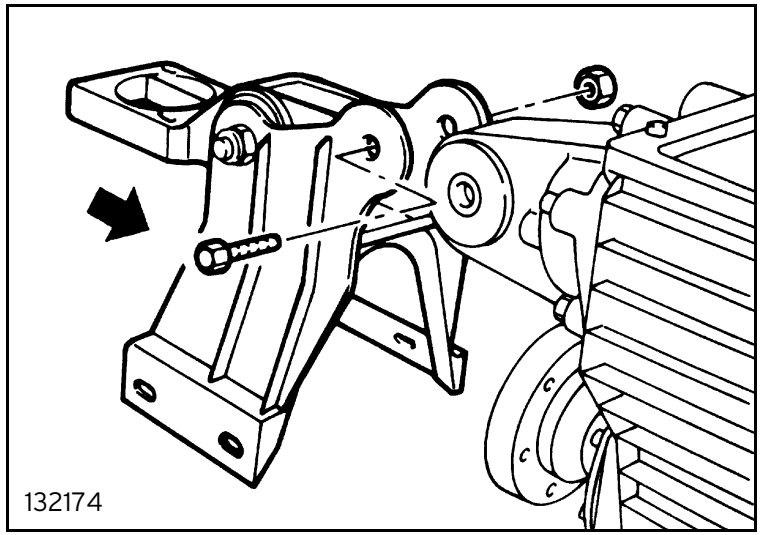

Fig. 75

- spread Loctite 518 sealant on the sealing surfaces, then fit the turret-cover assembly and tighten the upper cover securing screws to the specified torque (figure 76);

upper cover screws: 25 Nm

- insert the screws securing the turret to the support frame without locking them (figure 77);

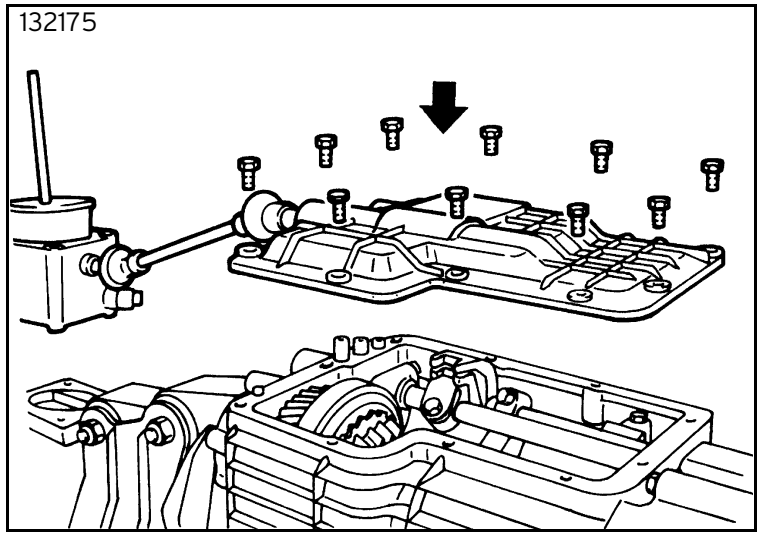

Fig. 76

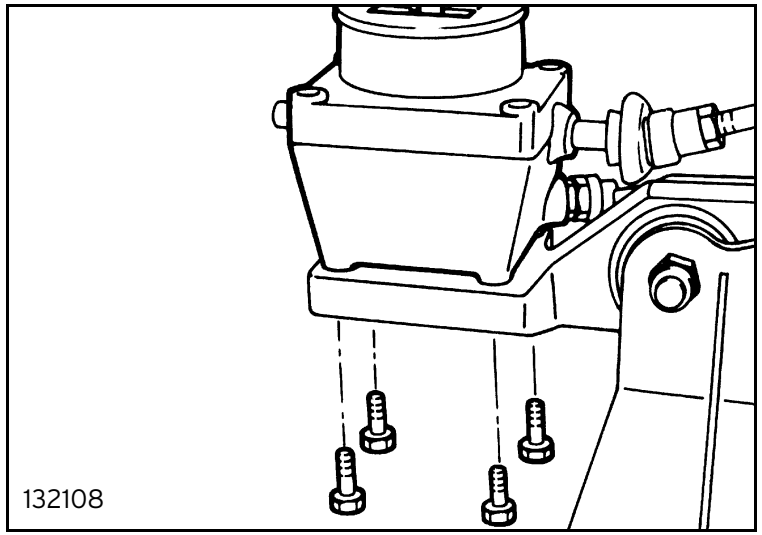

Fig. 77

Gear engagement external devices adjustment

- fit tool 962495063, then adjust the external control rod so that with the control lever perfectly centred crosswise (movement A) the ratchet control block angle is centred to the ratchets (figure 78);

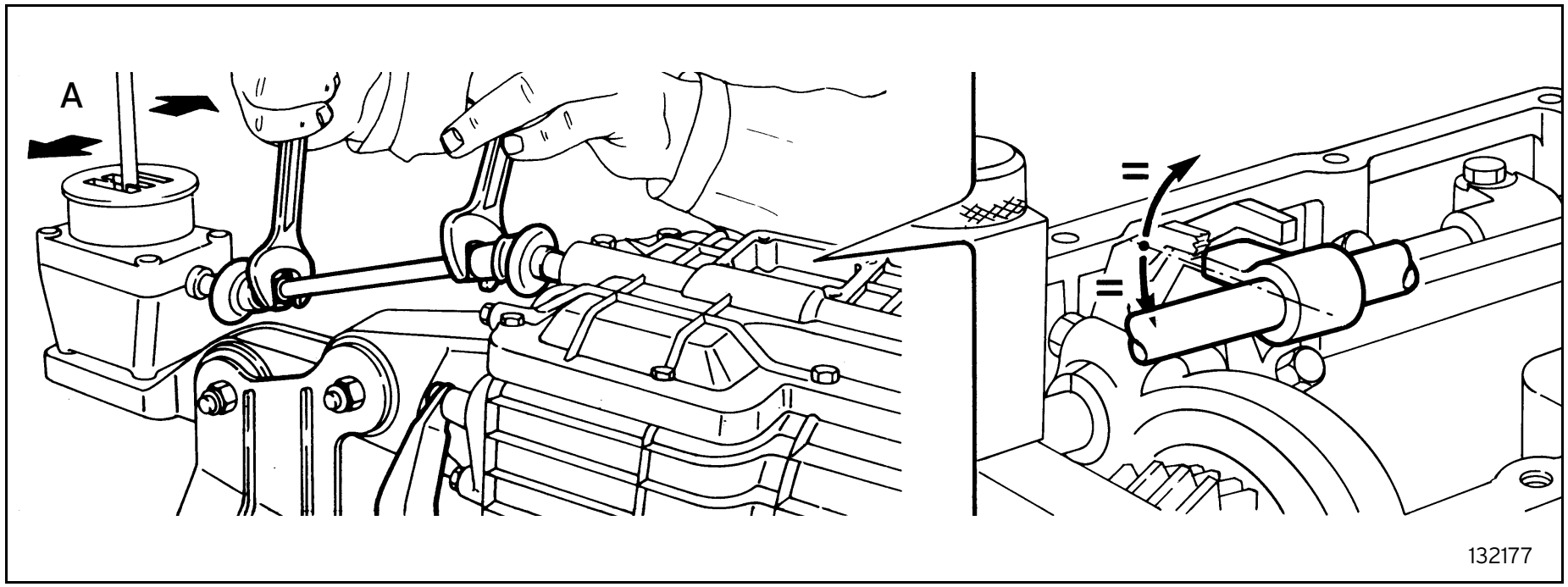

Fig. 78

- adjust the shift lever housing so that, with the control lever perfectly centred lengthways (movement B) the ratchet control block is axially centred to the ratchets, then tighten the securing screws to the specified torque (figure 79);

turret screws: 20 Nm

- remove the tool;
- fit the control levers access cover and tighten the securing screws.

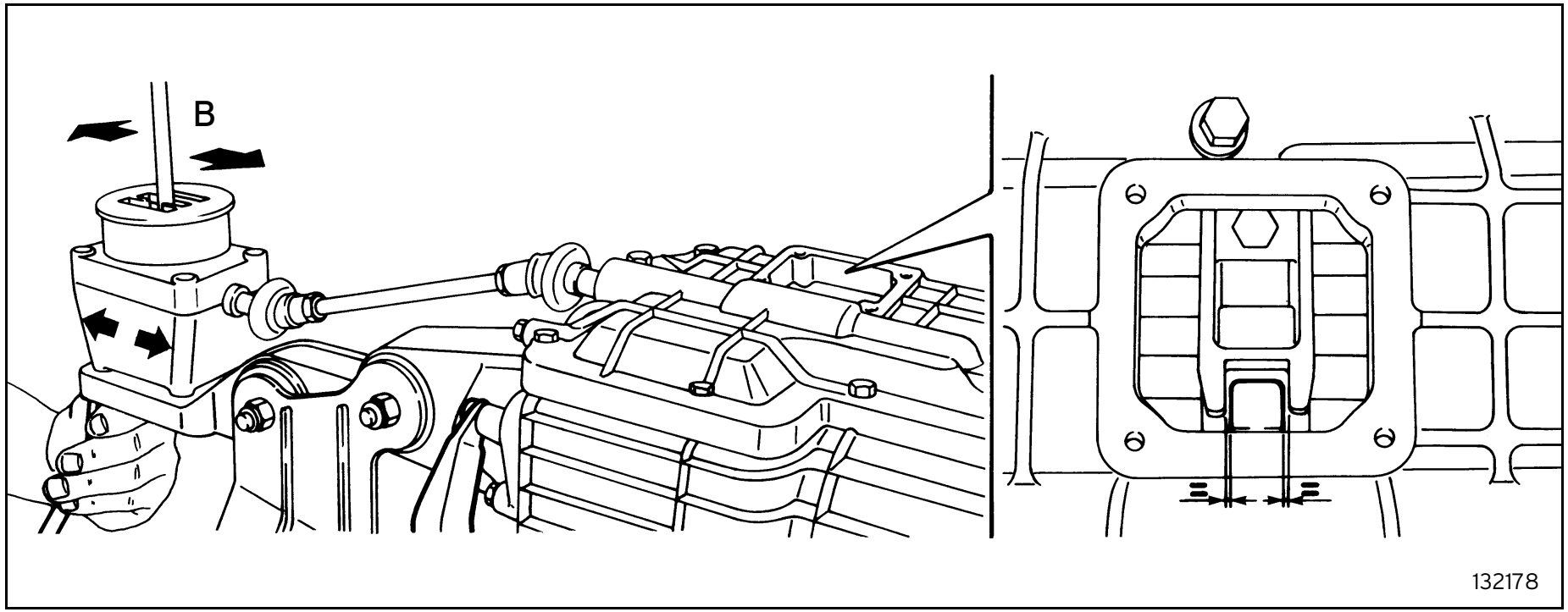

Fig. 79

CHECKS AND ADJUSTMENTS

Oil replacement

To replace the gearbox oil, proceed as follows:

- remove the draining cap and let all the oil flow out;
- clean the cap and re-screw it in place;
- fill with new oil through the filling hole until the oil reaches the hole lower edge;
- use the prescribed oil.

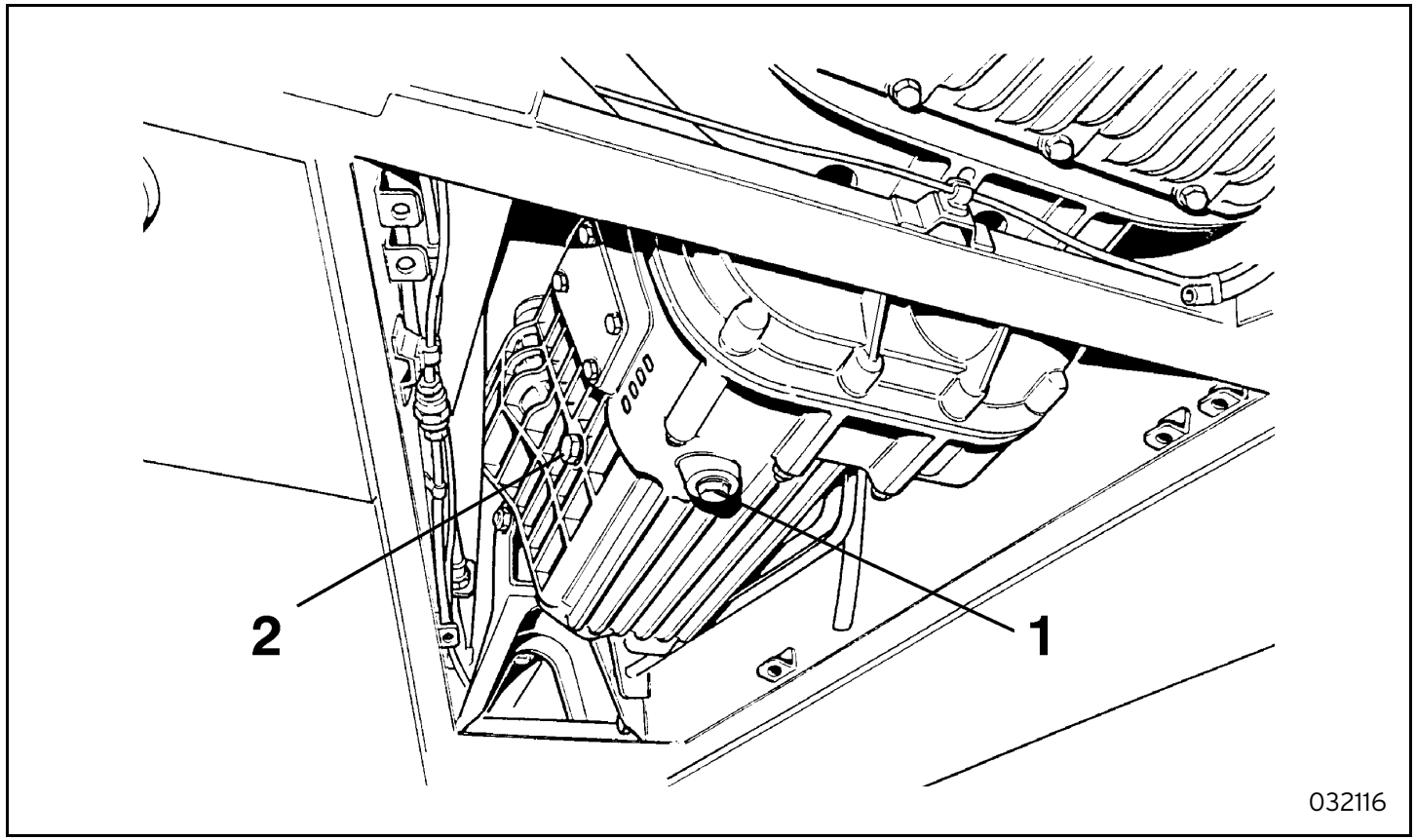

1 Drainage cap
2 Filler cap

Fig. 80 - Oil replacement