# Index

## 44 - SUSPENSION AND STEERING

## CONTENTS

DESCRIPTION P. 3
Camber
Caster
Toe-in
Lifting system

SPECIFICATIONS AND DATA P. 13
Suspension geometry adjustment
Shock absorber springs

CHECKS AND ADJUSTMENTS P. 20
Suspension geometry checking and adjustment procedure
Steering box shims
Lifting system maintenance

DIAGNOSTICS P. 33
Description of operation and diagnostics procedure
for lifting system and shock absorbers electronic
control system
Description of diagnostics procedure

## DESCRIPTION

Independent wheel, articulated parallelogram suspensions with tubular steel arms.
Electronic control shock absorbers with KONI system of setting in extension and manual or automatic 3 + 1 position adjustment.
"Antidive" configuration in the front due to the inclination of the upper arms to avoid pitching when braking. "Antisquat" in the rear to reduce pitching in acceleration.
Coaxial springs with the shock absorbers, two for each rear wheel and one for each front wheel.
Multi-piece light alloy rims and low section tyres.
Front and rear anti-roll bars.
"Flanbloc" type chassis connecting bushings.
Front and rear shock absorber rubber bumpers.

### Camber

The kingpin and tyre axis projections on the ground create a lever arm that affects the driving comfort. The camber also affects the road holding. The adjustment values have been studied to obtain the best compromise between road holding and comfort.

### Caster

Caster contributes to keep the vehicle straight and the wheels in a correct position. A car with positive caster will tend to keep straight allowing more stable and easier driving.
To adjust the front suspension caster, work on the bolts connecting the lower suspension arms to the chassis.
The front bolt affects the caster more than the camber.
If not sufficient, intervene on the shimming on the mounting points of the arms to the chassis (upper and lower).

### Toe-in

The purpose of toe-in is to ensure that the wheels keep parallel when the vehicle is running, to contribute to stable driving, to reduce side drift and tyre wear.
On rear-drive vehicles the front wheels tend to open while running due to the ground resistance and to their own inertia. For this reason on rear-drive vehicles, the toe adjustment on the front wheels is usually positive i.e. the directions of each wheel converge to a point in front of the vehicle.

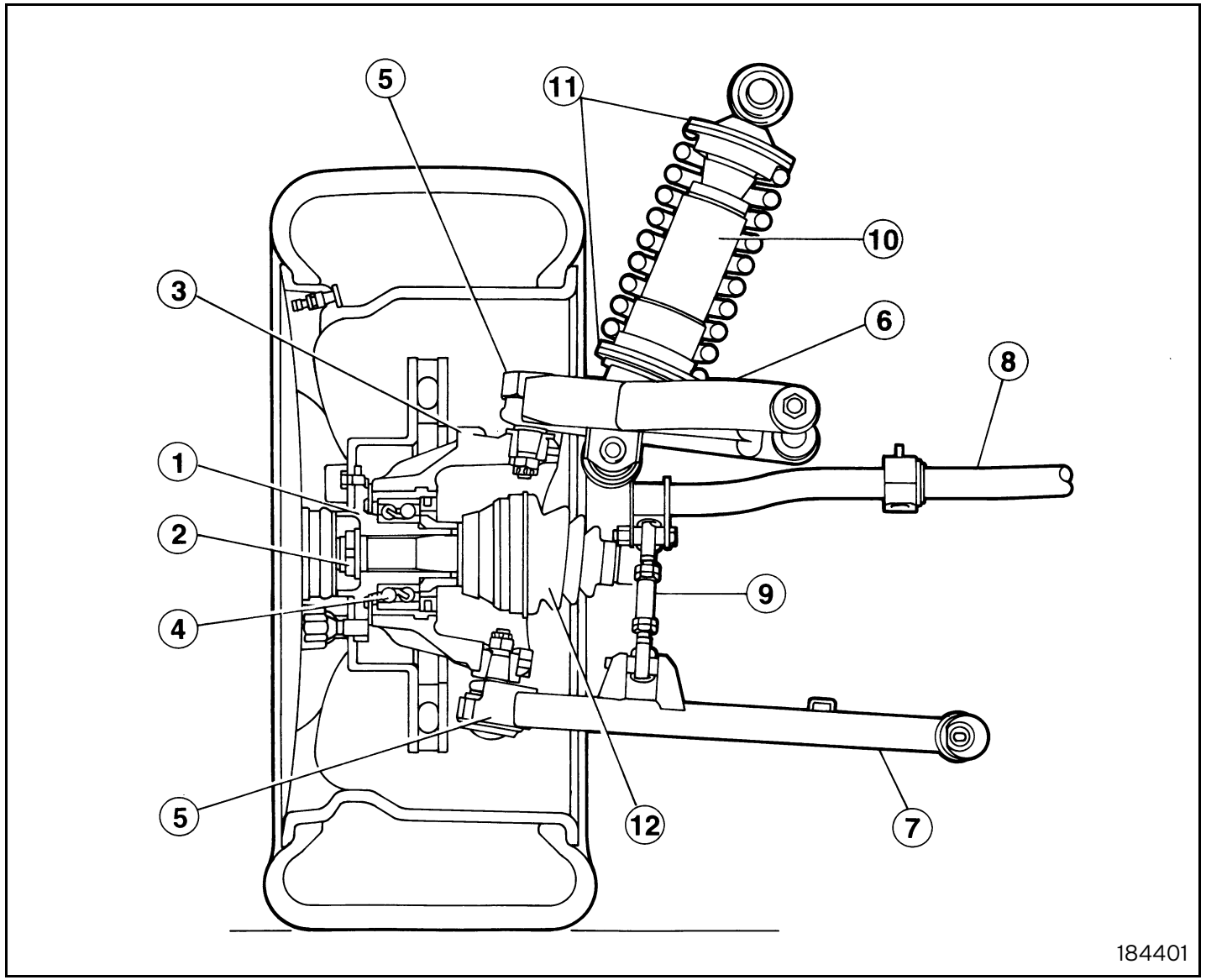


1 Hub
2 Nut
3 Hub housing
4 Bearing
5 Articulated joint
6 Upper arm
7 Lower arm
8 Anti-roll bar
9 Tie rod
10 Shock absorber
11 Height adjustment ring nut and counter ring nut
12 Constant velocity joint

Fig. 1 - Front suspension

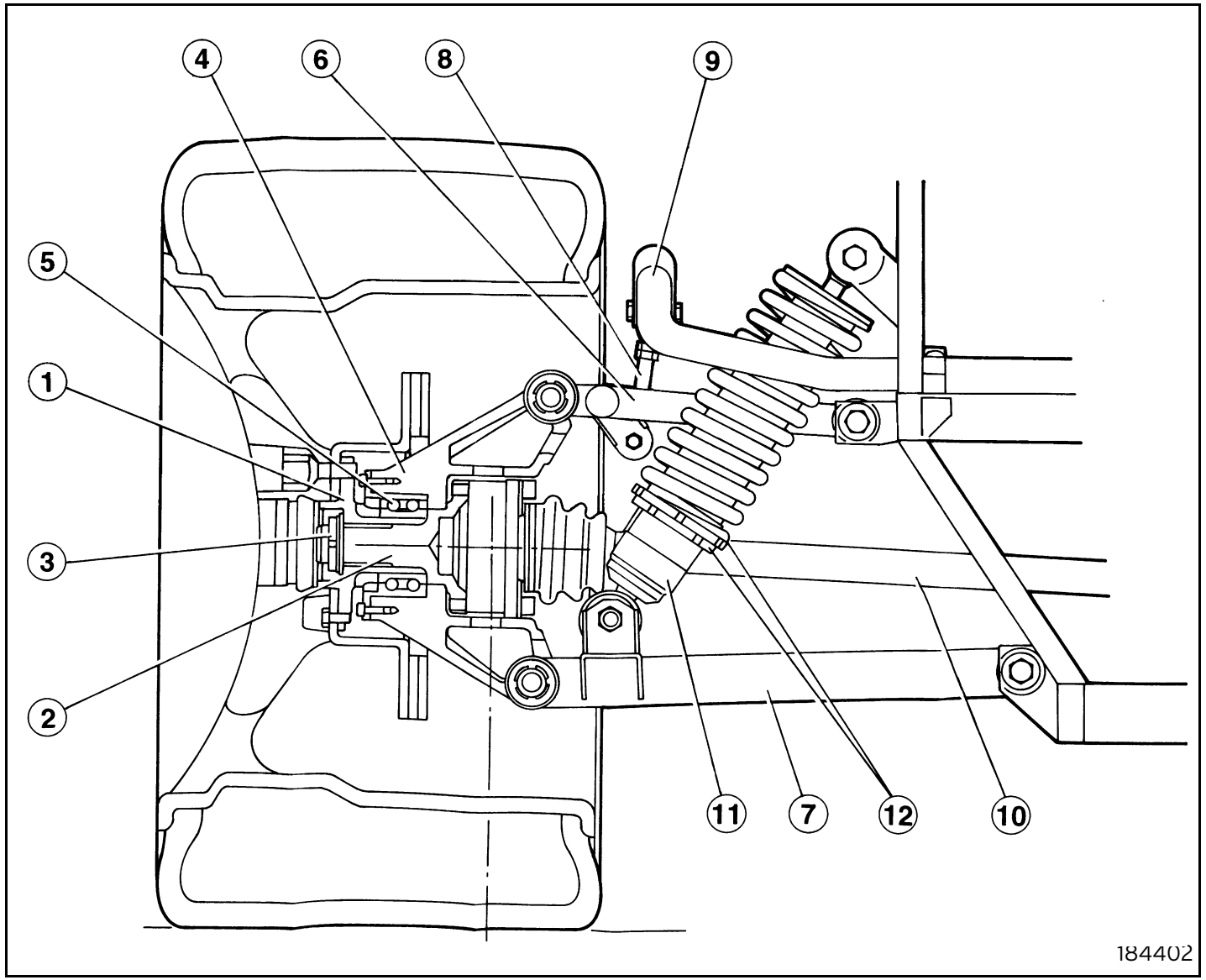


1 Flange
2 Hub
3 Nut
4 Hub housing
5 Bearing
6 Upper arm
7 Lower arm
8 Tie rod
9 Anti-roll bar
10 Axle shaft
11 Shock absorber
12 Vehicle height adjustment ring nut and countering nut

Fig. 2 - Rear suspension

**Lifting system**
This device enables the front of the car to be raised at low speed, allowing easier access to areas with uneven surfaces and improving the manoeuvrability when parking.

The system is composed of the following components:
- pressure accumulator, located in the front of the car;
- front shock absorbers;
- electronic control unit (controls both the Lifting system and the shock absorbers setting)
- ascent or descent control button;
- connecting hoses and electric wires;

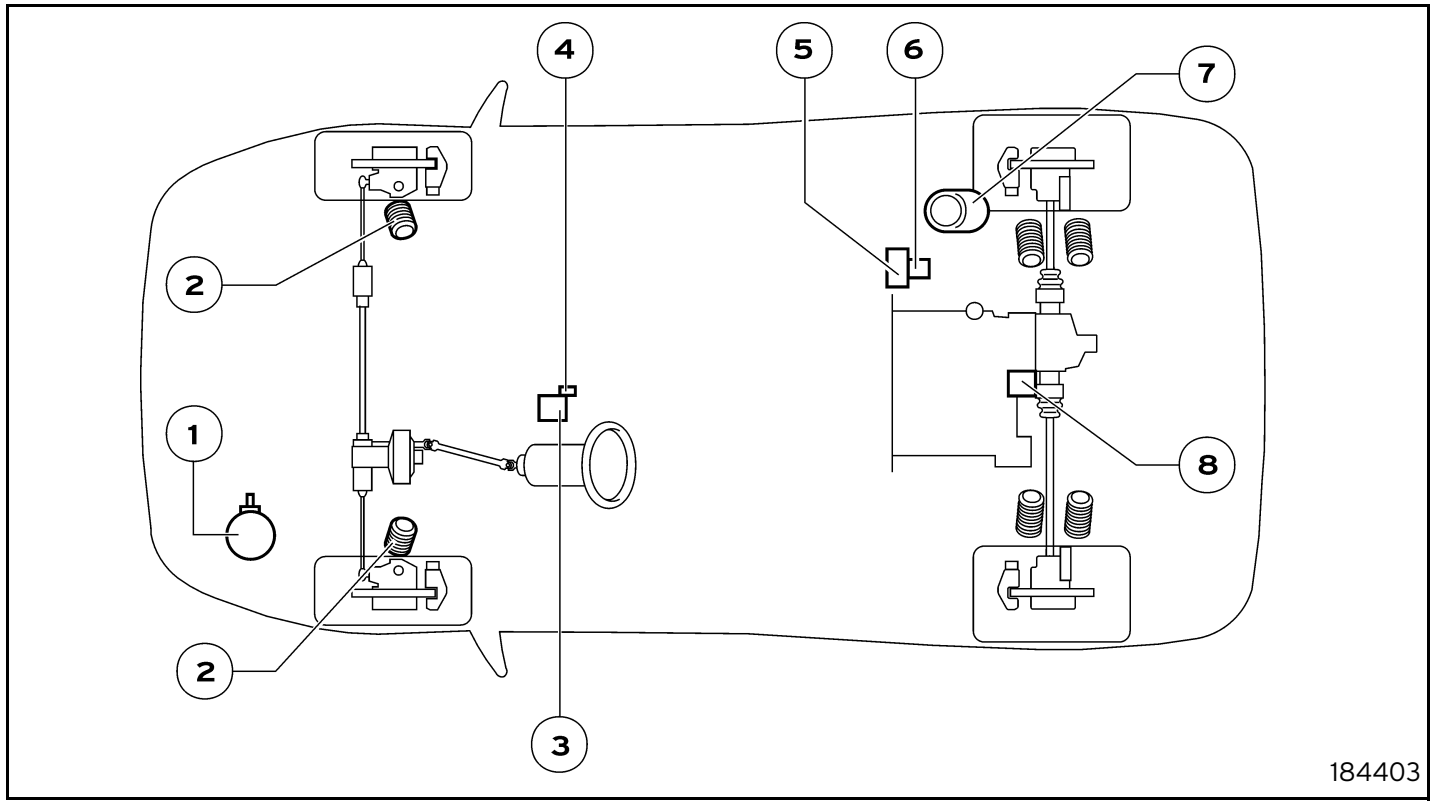


1 Pressure accumulator
2 Front shock absorbers
3 Electronic control unit
4 Ascent or descent control button
5 Solenoid valves and pressure switches group
6 Flow divider
7 Power steering liquid reservoir
8 Hydraulic pump

Fig. 3 - Lifting system layout

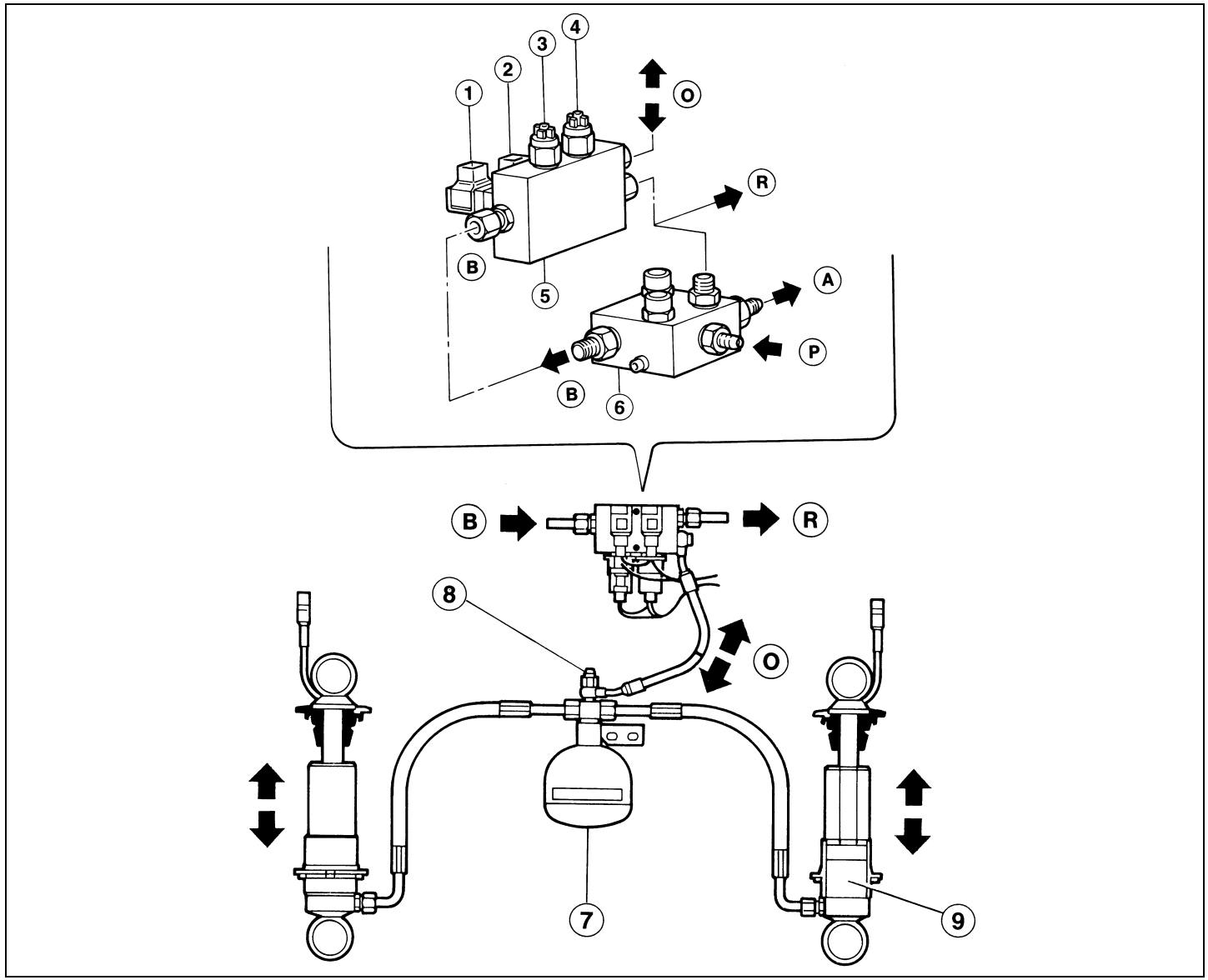


1 Raising solenoid valve
2 Lowering solenoid valve
3 Minimum pressure switch
4 Maximum pressure switch
5 Solenoid valve unit
6 Flow separator
7 Pressure accumulator
8 Bleeder valve
9 Lower shock absorber chamber

P. From power steering pump
A To power steering system
B. To flow separator
R. To power steering oil reservoir
O. To front shock absorbers

Fig. 4 - Hydraulic lifting system connections

- Increased capacity power steering fluid reservoir (1.3 litres).
- Hydraulic pump of the type used for power steering systems with capacity suited to the new system.
- Warning light on instrument panel.
- Vehicle speed signal of the system used to adjust the shock absorbers.

## Operation (figure 5)

### Low position hold

The circuit condition is shown in position (I):
- solenoid valve (1): open
- solenoid valve (2): open.

In normal conditions, the height of the vehicle front is determined by the standard setting which is illustrated in section 44 - SUSPENSION AND STEERING.
The fluid crosses the solenoid valve (1) and is sent to the reservoir. The pressure inside the system reaches 25/30 bars and the minimum pressure switch (3) opens.
Following occasional pressure increases (e.g. rough road surface), the minimum pressure valve (5) opens. The excess pressure is relieved by means of the solenoid valve (2). Furthermore, the ECU cyclically closes the solenoid valves for short times during vehicle operation (raising condition, see next paragraph) to keep the hydraulic circuit pressure in the range of 25 bars.

### Raising

The circuit condition is shown in position (II):
- solenoid valve (1): closed
- solenoid valve (2): closed.

The driver can press the "UP" button for longer than two seconds to lift the front axle.

⚠ The ECU will allow system operation as long as the vehicle is travelling at a speed slower than 70 km/h.

The warning light on the dashboard will flash when the system is raising. The warning light will come on fixed when UP position is reached.

The raising solenoid valve (1) closes to allow the passenger of pressurised fluid from the power steering pump to the pressure accumulator and to the two front shock absorbers. The lower solenoid valve (2) closes to prevent the fluid from reaching the reservoir.
The fluid enters the lower shock absorber chamber and lifts the vehicle. The process is stopped when maximum height, i.e. approximately 40-50 mm more with respect to home position, is reached.
This position is reached when the pressure in the system reaches 80/85 bars when the maximum pressure switch opens (4).

High position hold

The circuit condition is shown in position (III):
- solenoid valve (1): open
- solenoid valve (2): closed.

The pressure in the system is kept at 80/85 bars. The maximum pressure switch (4) is open.
The fluid crosses the solenoid valve (1) and is conveyed to the reservoir. The lowering solenoid valve (2) is closed and the fluid is relieved from the reservoir.

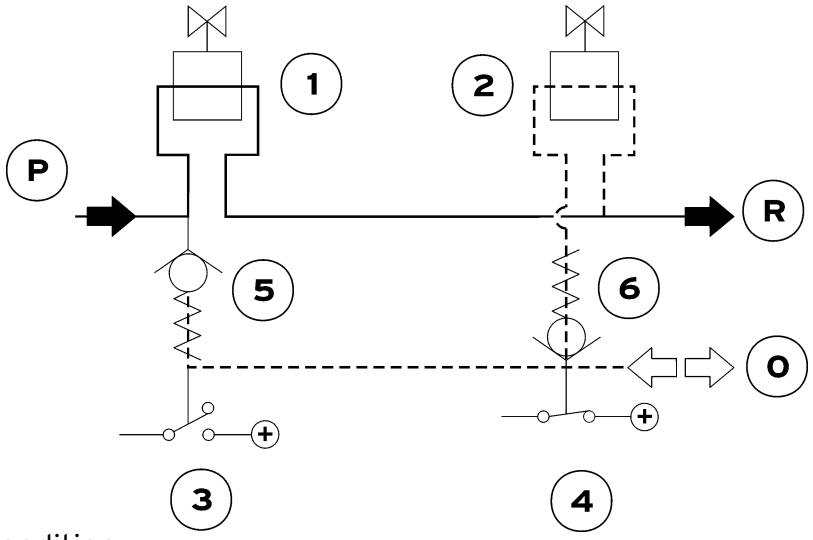


I. Low position hold condition

184405

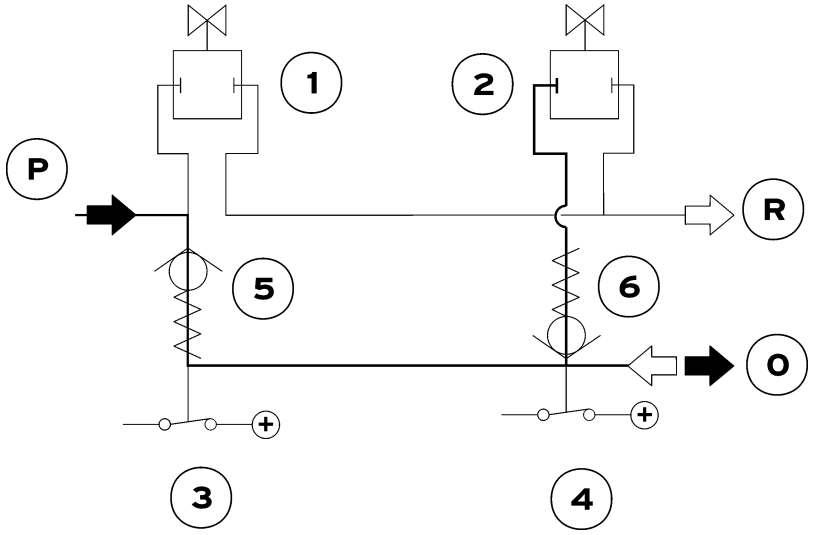


II. Raising condition

184406

1 Raising solenoid valve
2 Lowering solenoid valve
3 Minimum pressure switch
4 Maximum pressure switch
5 Check valve
6 Minimum pressure valve

P: power steering pump
R: reservoir
O: front shock absorbers

Fig. 5 - Lifting system operating conditions

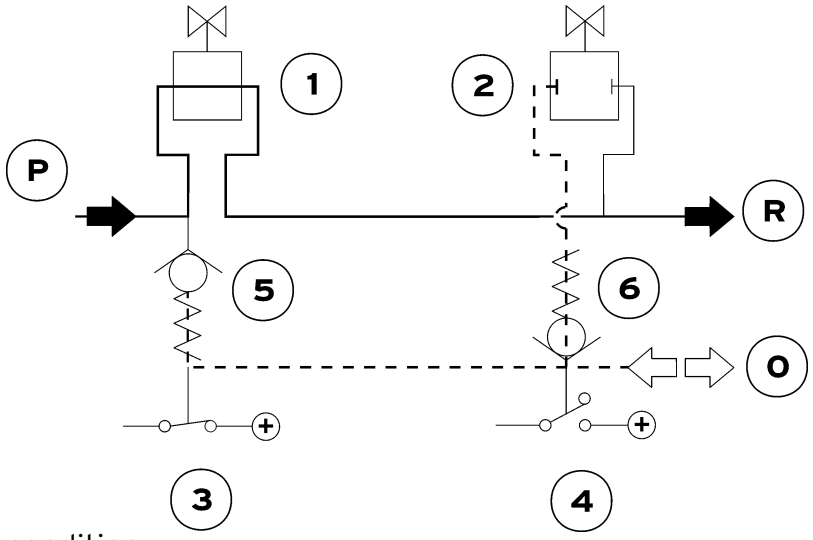


III. High position hold condition

184407

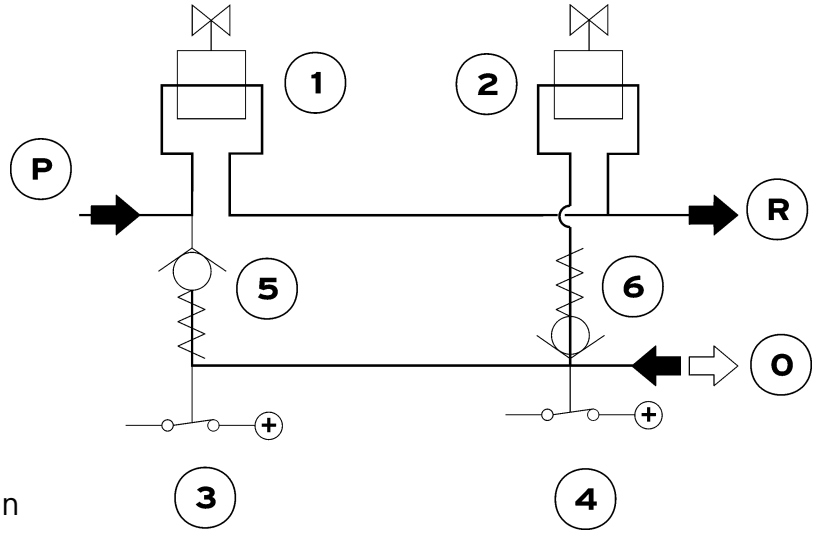


IV. Lowering condition

184408

1 Raising solenoid valve
2 Lowering solenoid valve
3 Minimum pressure switch
4 Maximum pressure switch
5 Check valve
6 Minimum pressure valve

P: power steering pump
R: reservoir
O: front shock absorbers

Fig. 5 - Lifting system operating conditions

Lowering

The circuit condition is shown in position (IV):

- solenoid valve (1): open
- solenoid valve (2): open.

The vehicle can return to normal position either by manual command from the driver (by pressing the DOWN button) or automatically when the vehicle exceeds a speed of 70 km/h.
The fluid crossed the solenoid valve (1) and is conveyed to the reservoir. The lower solenoid valve (2) opens relieving the fluid from the shock absorbers.
The warning light will flash also when the system is being lowered.

The raising and lowering phase last for approximately 20 seconds.

⚠ UP position will be held if the system is raised when the engine is stopped (key-off). The system will remain in UP position if the residual pressure is higher than the maximum pressure (80 bars) at the following start-up (engine running). The system will go to DOWN position if, on the other hand, the residual pressure is included between the maximum and minimum value (25 bars).

## SPECIFICATIONS AND DATA

### Suspension geometry adjustment

| | |
|---|---|
| Front caster $\gamma$ | 6°0′ to 6°32′ |
| Camber angle<br>Front $\alpha$<br>Rear $\beta$ | <br>- 0°44′/- 0°36′<br>-0°16′/-0°32′ |
| Toe-in<br>Front t1<br>Rear t2 | <br>+ 0.5/+ 1.0<br>+2/+2.4 |
| Ride height (*)<br>Front h1<br>Rear h2 | <br>142/147<br>129/134 |
| Adjustment shim SP:<br>005133170<br>005133488<br>005133489<br>005133490<br>005133169 | <br>1.0<br>1.5<br>2.0<br>2.5<br>3.0 |

(*) Measured on the lower surface of the chassis by the suspensions

**Shock absorber springs**

| | |
|---|---|
| Free length<br>Front<br>Rear | <br>258.1<br>282 |
| Static load<br>Front<br>Rear | <br>515 Kg<br>325 Kg |
| Length with static load<br>Front<br>Rear | <br>186<br>211 |
| Dynamic load<br>Front<br>Rear | <br>772.1 Kg<br>568.0 Kg |
| Length with dynamic load<br>Front<br>Rear | <br>150<br>158 |
| Wire diameter<br>Front<br>Rear | <br>12.75<br>11.75 |
| Outer spring diameter<br>Front<br>Rear | <br>92.5<br>90.5 |
| Flexibility<br>Front<br>Rear | <br>0.14 mm/Kg<br>0.218 mm/Kg |
| Anti-roll bars diameter<br>Front<br>Rear | <br>25 x 35<br>25 x 4 |

**Chassis dimensions**

| | |
|---|---|
| A – B | Rear lower mount for front suspension |
| C – D | Rear lower mount for rear suspension |
| 3D – 3S | Front lower mount for front suspension |
| 4D – 4S | Front upper mount for front suspension |
| 6D – 6S | Front mount for torsion bar |
| 7D – 7S | Shock absorber mount for for front suspension |
| 8D – 8S | Rear upper mount for front suspension |
| 13D – 13S | Engine mount |
| 14D – 14S | Front lower mount for rear suspension |
| 21D – 21S | Cross member check point |
| 19D – 19S | Rear mount for torsion bar |
| 18D – 18S | Rear shock absorber mount for rear suspension |
| 17D – 17S | Front upper mount for rear suspension |
| 16D – 16S | Front shock absorber mount for rear suspension |
| 15D – 15S | Front upper mount for rear suspension |

(*) reference axes

⚠ Tolerances that are not otherwise specified are ± 1.5 [mm]

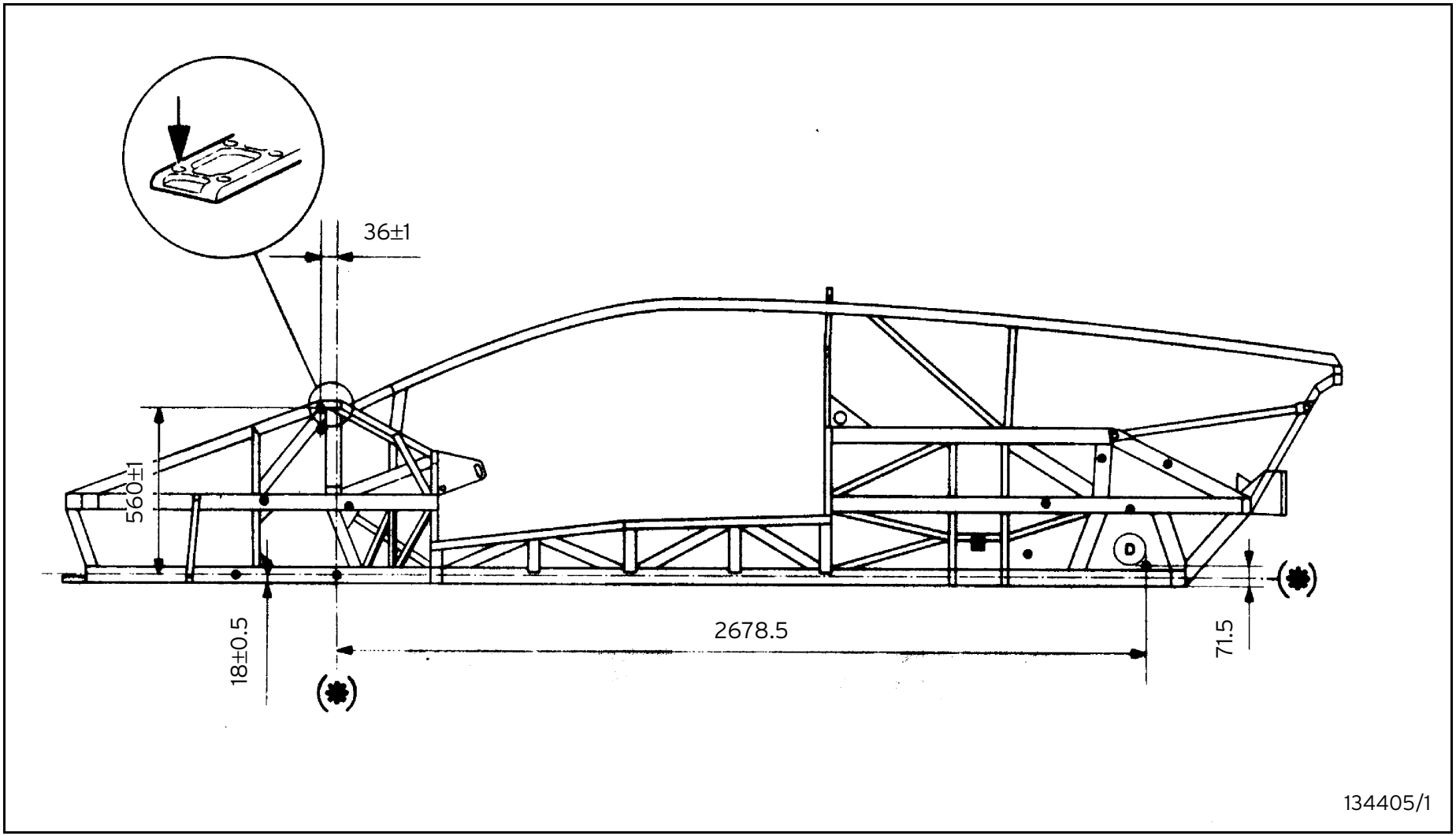
36±1
560±1
18±0.5
2678.5
71.5
D
134405/1

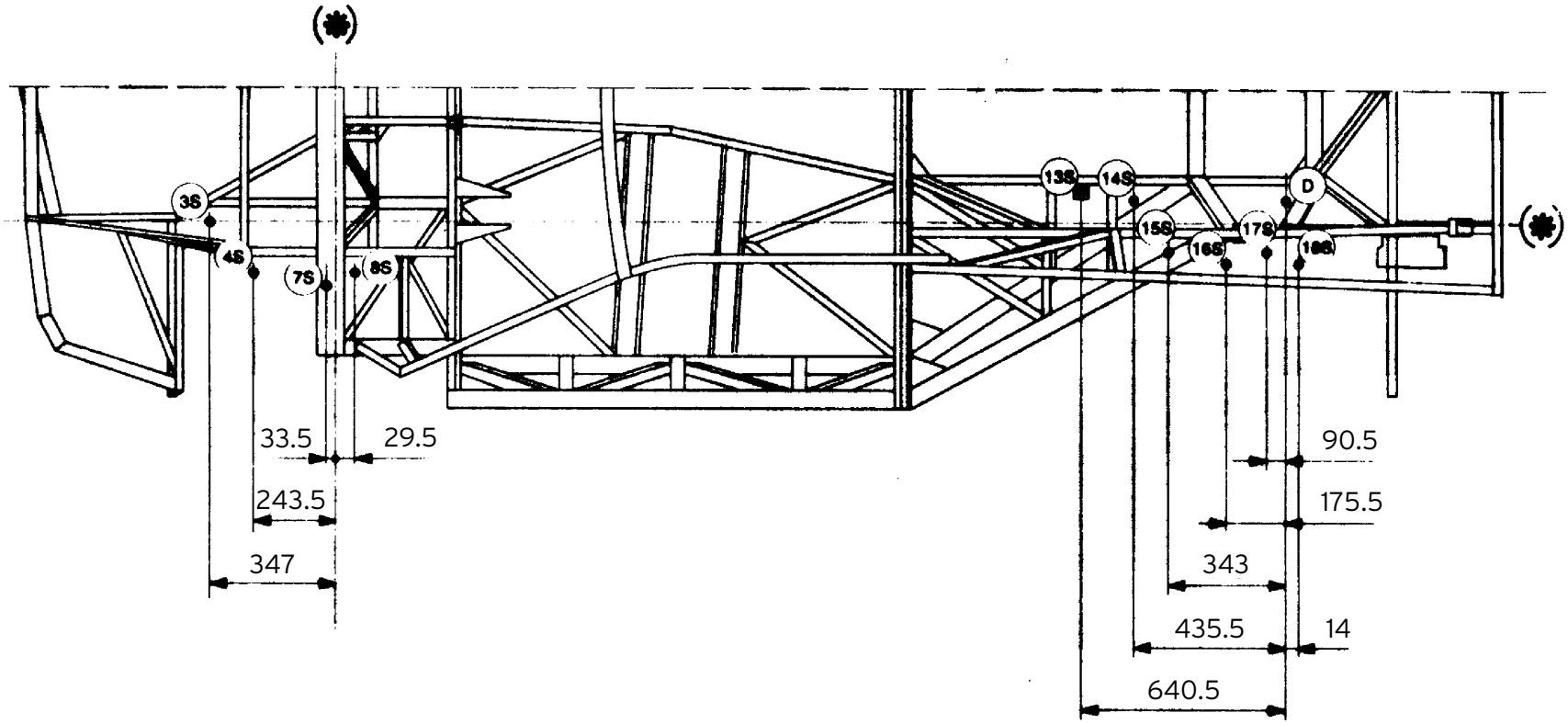
3S
4S
7S
8S
13S
14S
15S
16S
17S
18S
D
33.5
29.5
243.5
347
90.5
175.5
343
435.5
14
640.5

134405/1

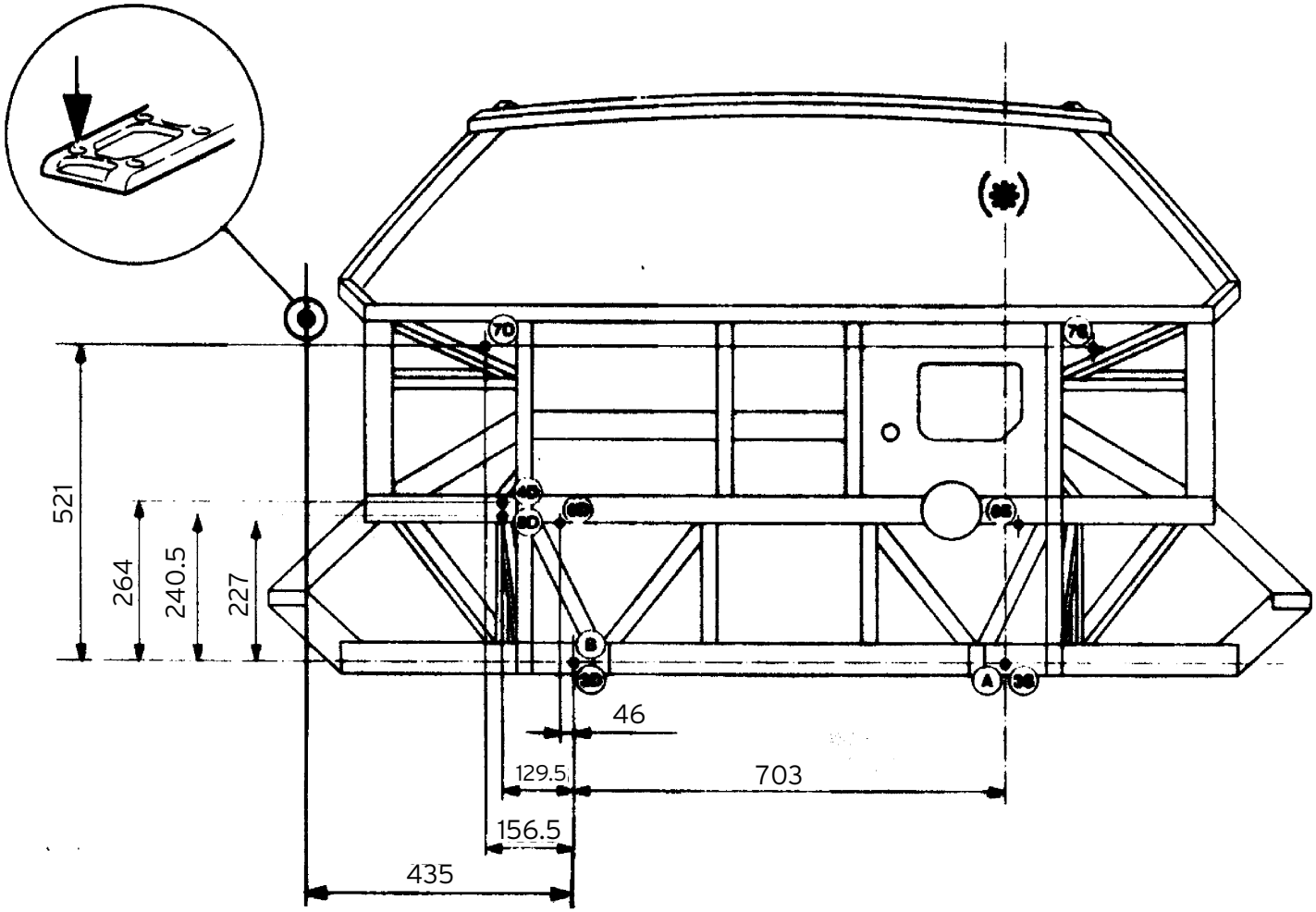
521
264
240.5
227
46
129.5
703
156.5
435
134405/2

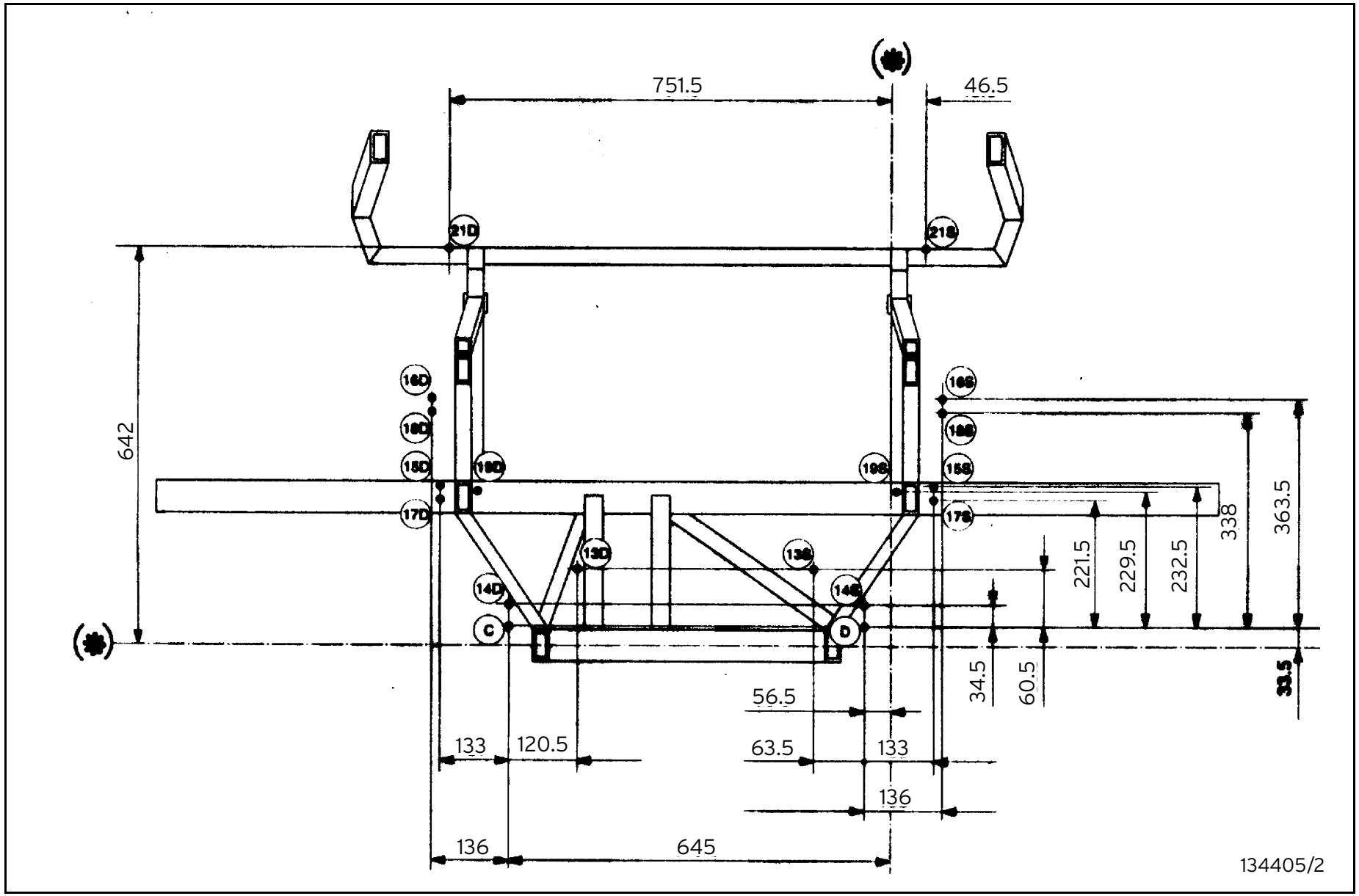
751.5
46.5
21D
21S
16D
16S
18D
18S
15D
19D
19S
15S
17D
17S
13D
13S
14D
14S
C
D
642
363.5
338
221.5
229.5
232.5
34.5
60.5
33.5
56.5
133
120.5
63.5
133
136
136
645
134405/2

## CHECKS AND ADJUSTMENTS

**Suspension geometry checking and adjustment procedure**
A: ADJUSTMENT POINTS
B: FRONT

## FRONT RIDE HEIGHT

STEP 1

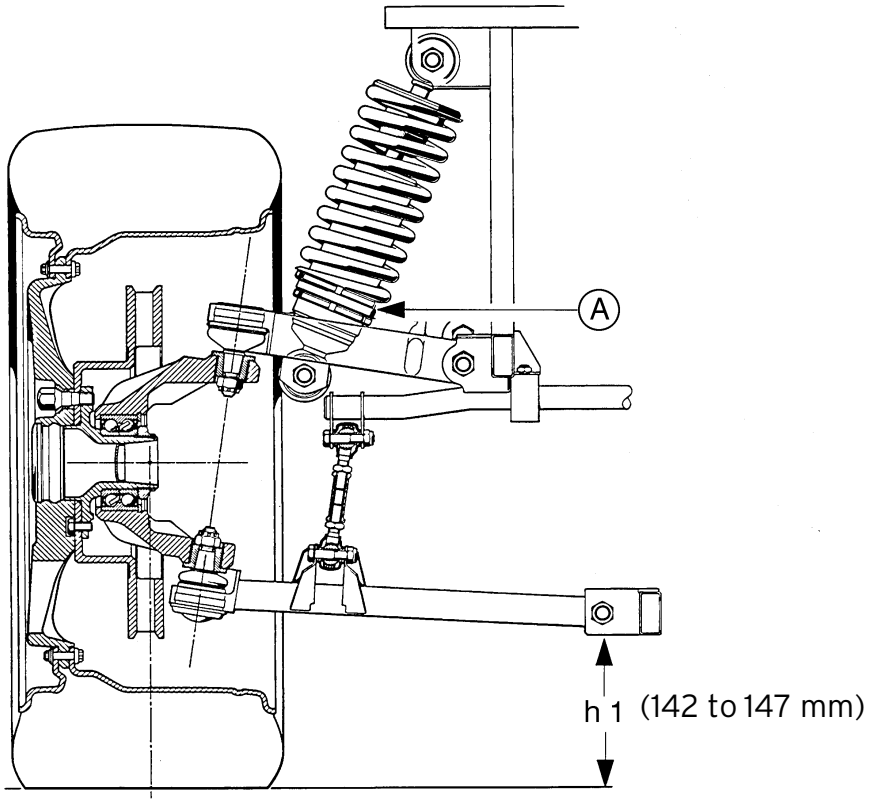

## REAR RIDE HEIGHT

STEP 2

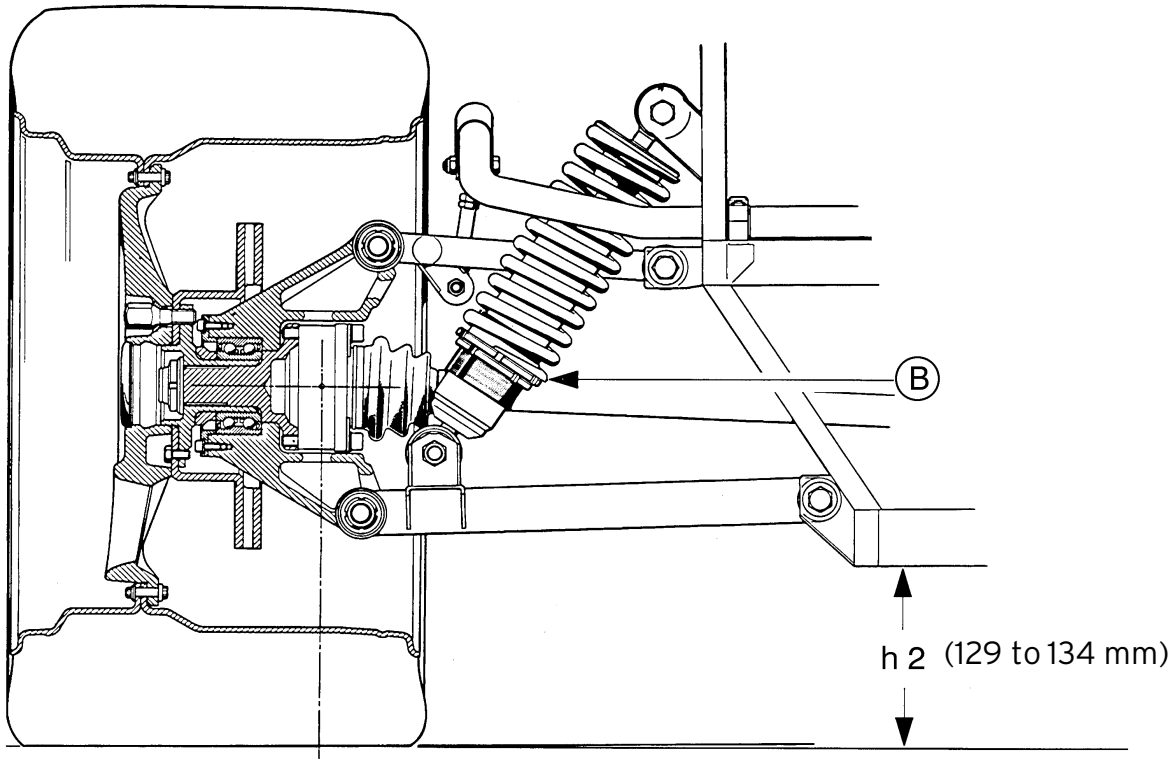

STEP 3

## WHEELS EQUIPMENT ASSEMBLY

## REAR WHEELS CAMBER

STEP 4

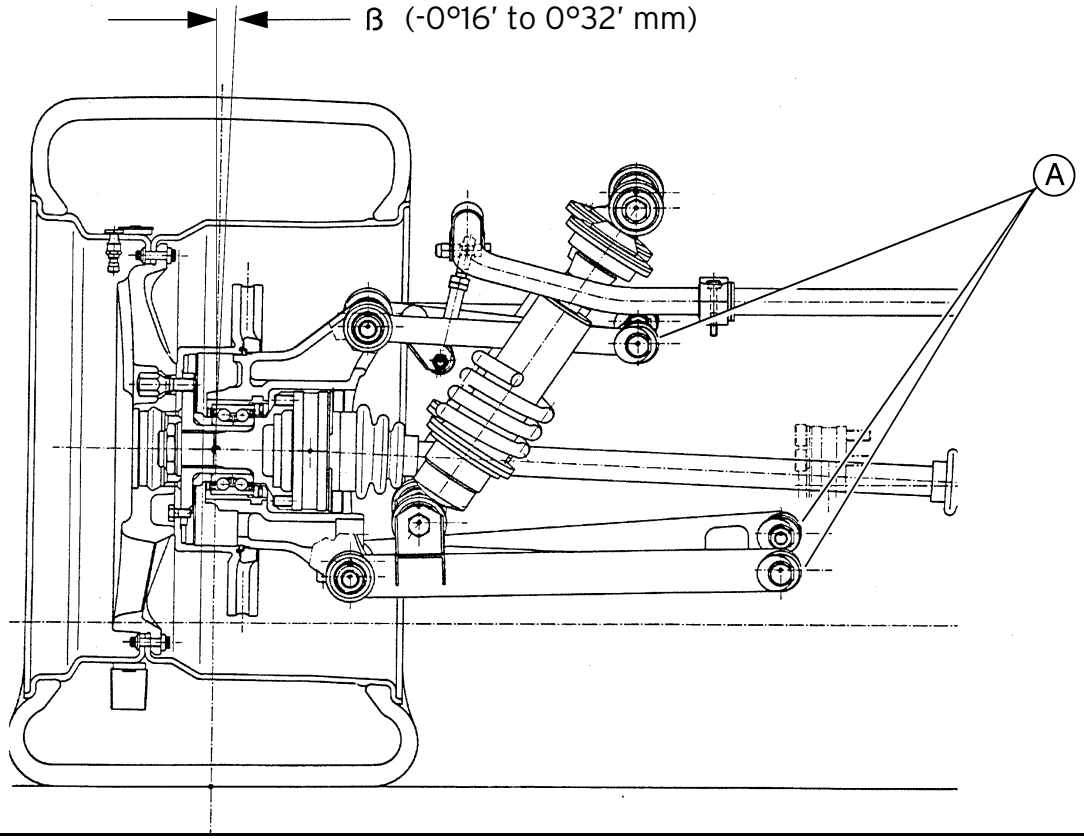

## REAR WHEELS TOE-IN

STEP 5

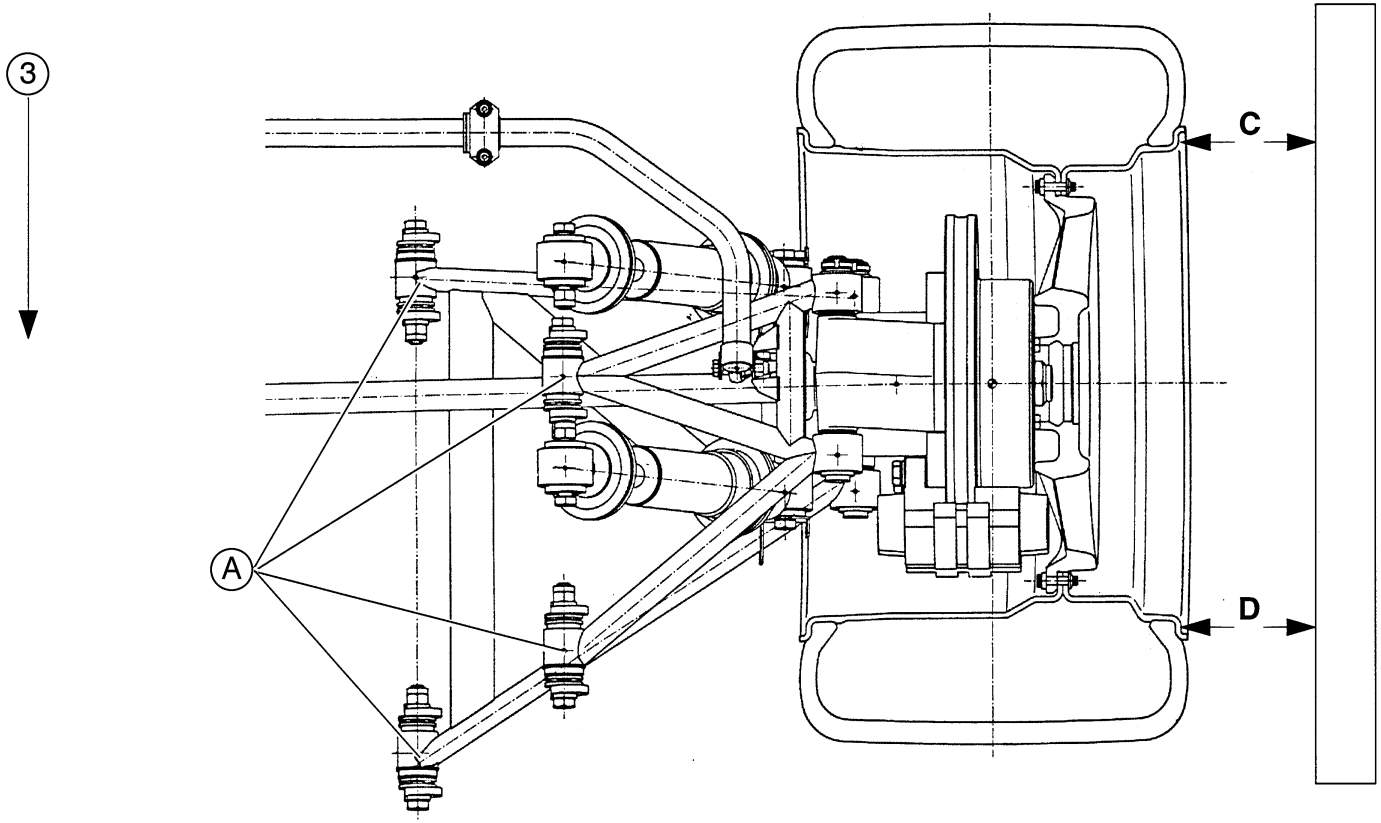

## STEERING WHEEL POSITION

STEP 6

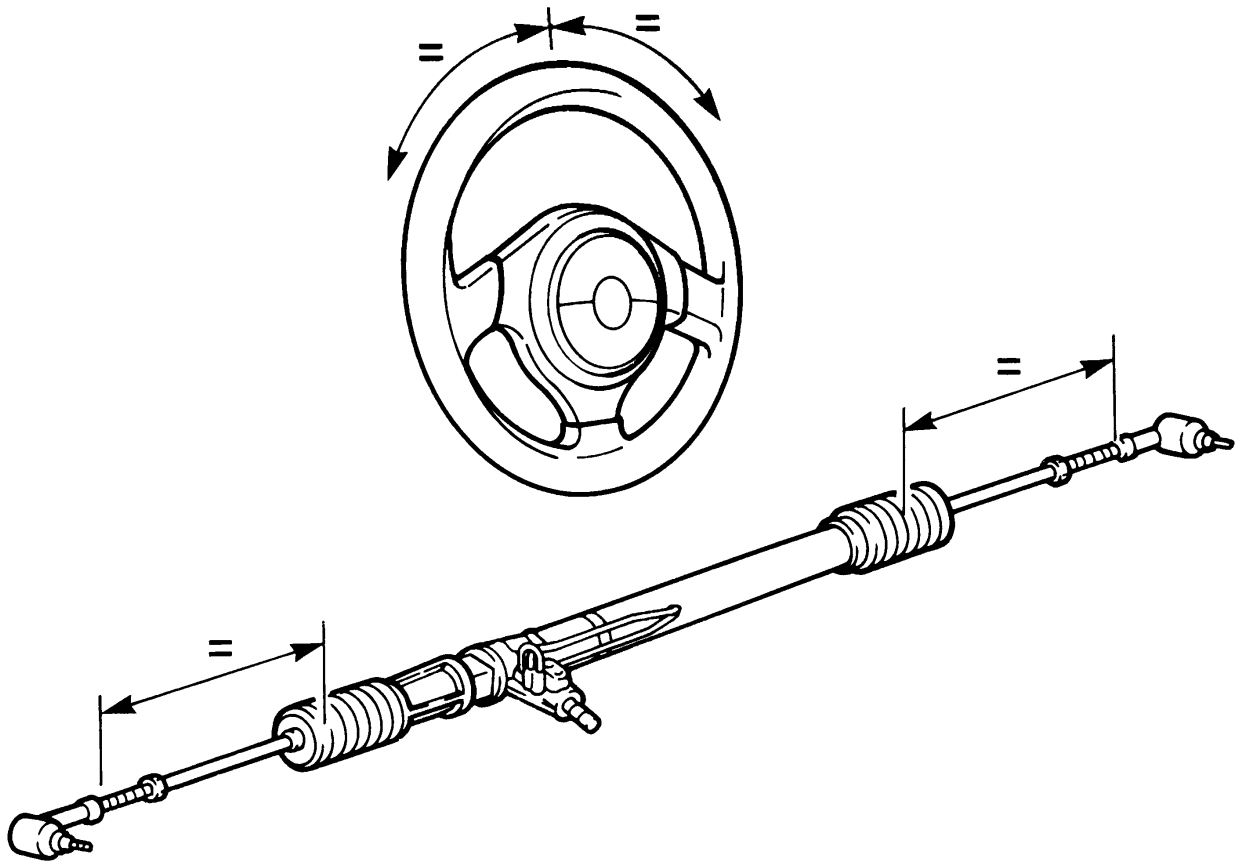


STEP 1:

$$\frac{\text{rotation to right + rotation to left}}{2}$$

STEP 2:
The steering wheel must be in the central position;
if it is not, remove and refit in the correct position

## FRONT WHEELS CASTER

STEP 7

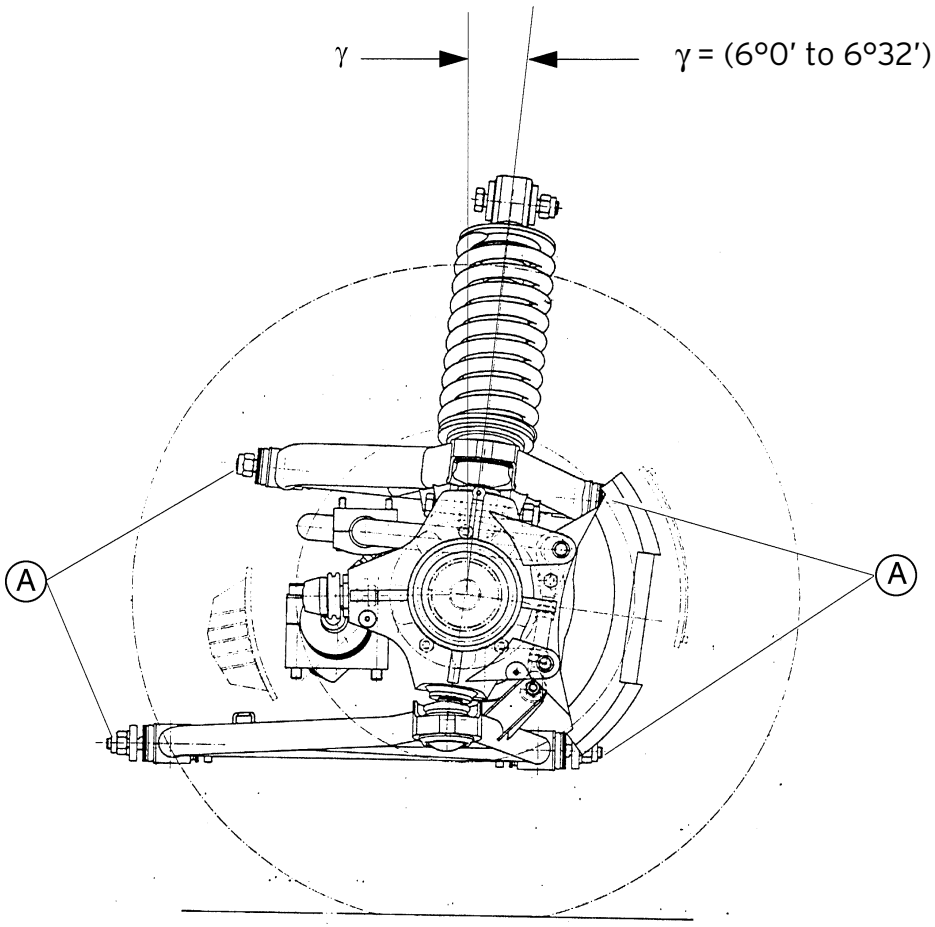

## FRONT WHEELS CAMBER

STEP 8

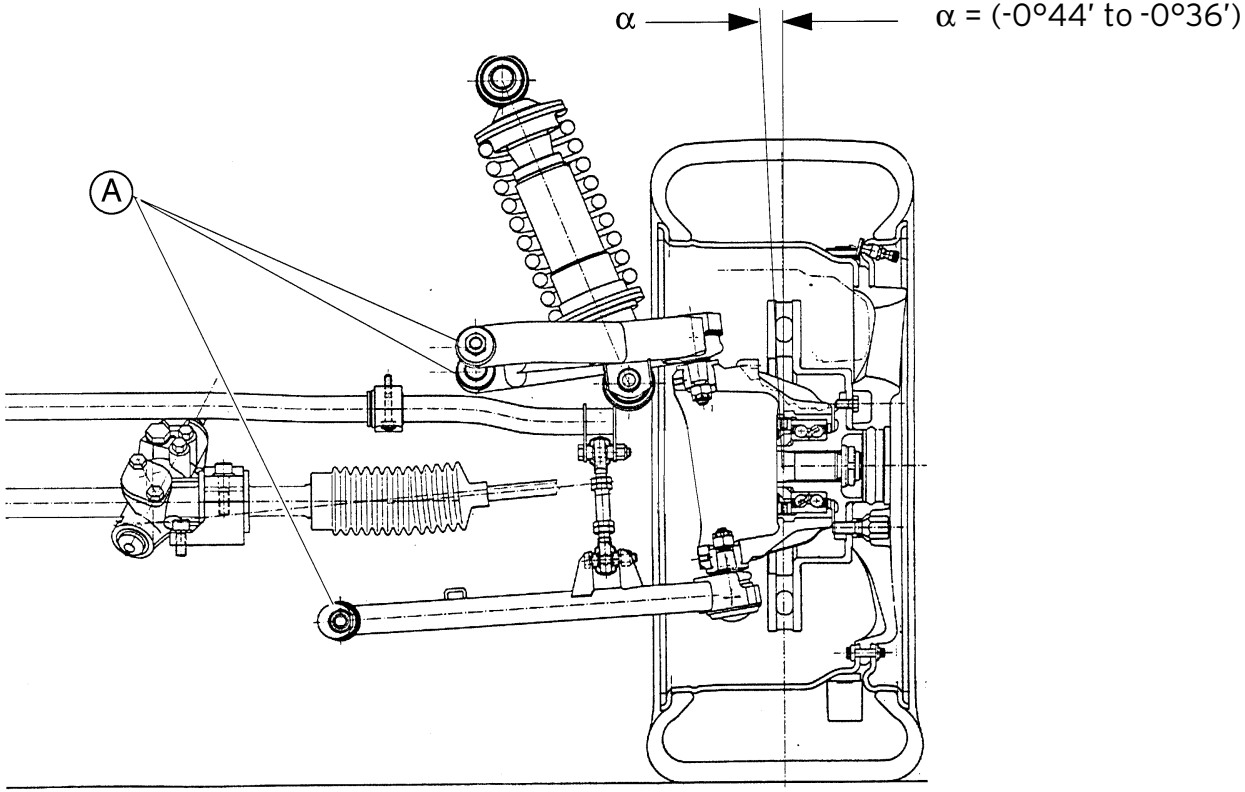

## FRONT WHEELS TOE-IN

STEP 9

B = A (0.5 to 0.9) mm

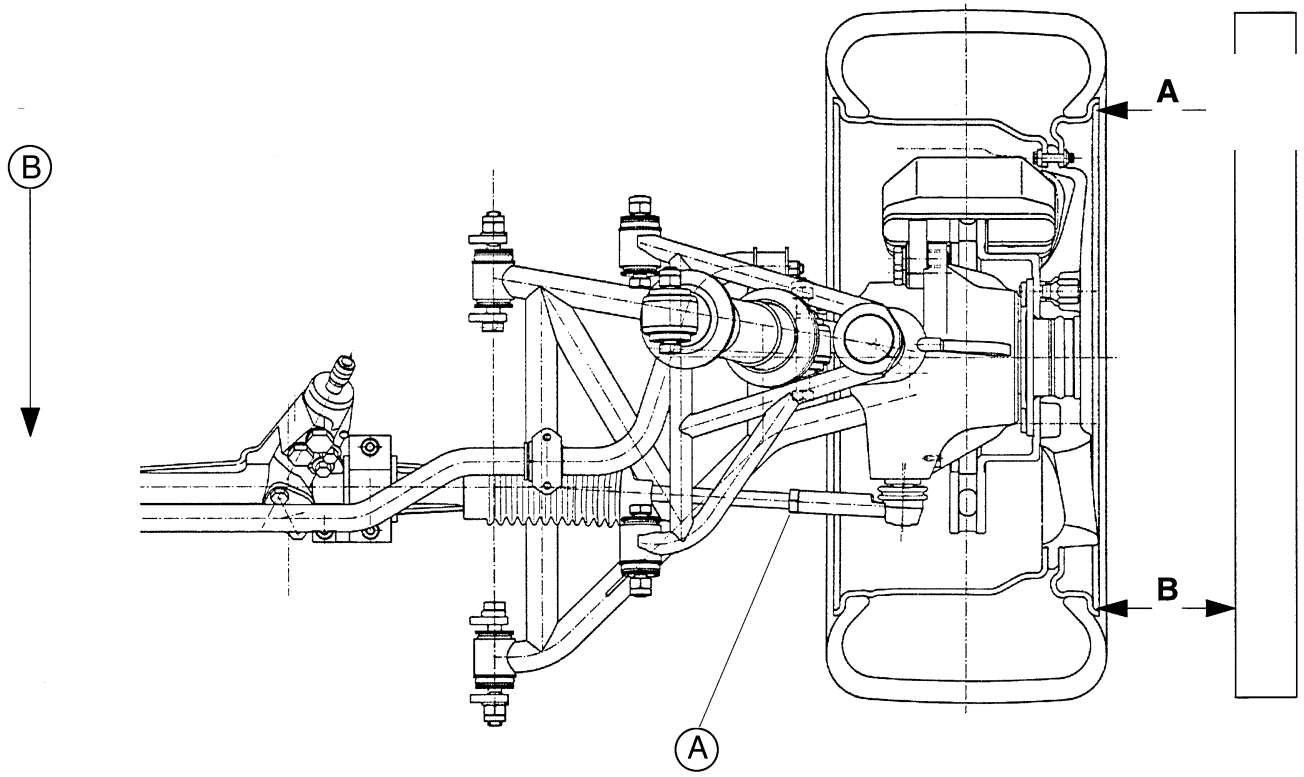

## FRONT OUT-OF-ALIGNMENT

STEP 10

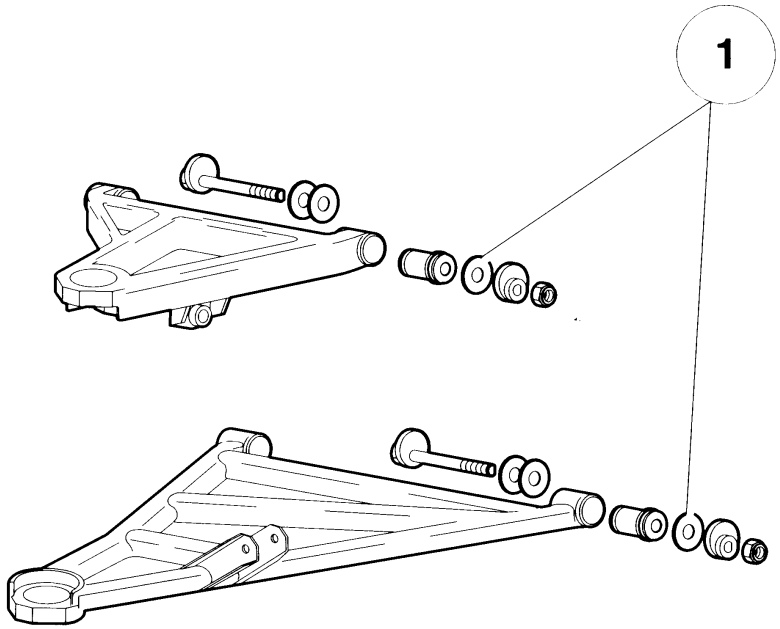


1 – adjustment shim SP

## REAR OUT-OF-ALIGNMENT

STEP 11

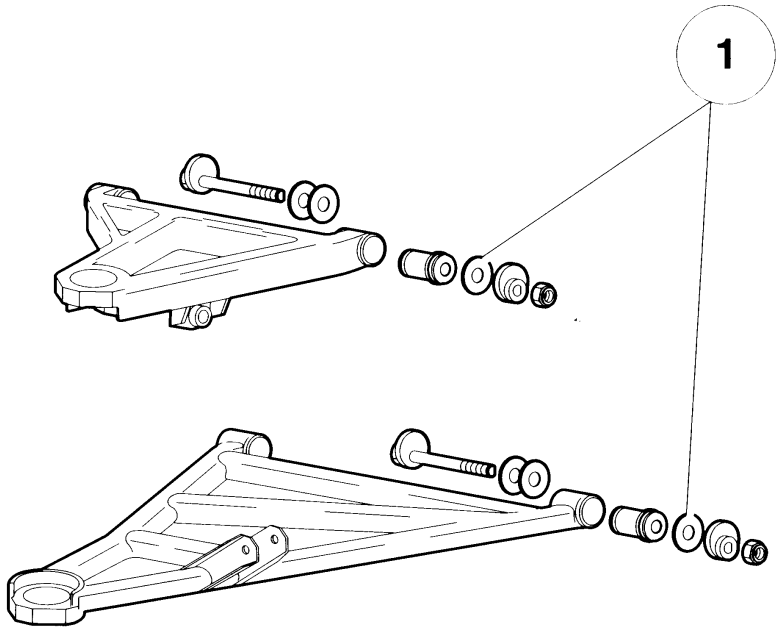


1 – adjustment shim SP

⚠ The adjustment shims SP are only to be used to adjust the caster.

**Steering box shims**

The original shim is only to be changed in the case of substantial damage to the supporting parts of the steering box.

The checking/adjustment procedure for the front geometry by shimming the steering box is to be carried out with the vehicle prepared as follows:
- steering box initial shim (arrow) : 5 [mm];
- toe-in of both front wheels with vehicle in full running order : 0 [mm] (A=B).

Proceed as follows:
- using suitable equipment compress the front axle to pack the shock absorbers;
- check that under these conditions the toe-in of both front wheels is 0/-0.4 [mm] (B = A –0, -0.4 [mm], wheel toe-out);

If this is not the case, proceed as follows:
- if a wheel has too much toe-in (B≥A) the shim must be increased on the corresponding driving side;
- if a wheel has too much toe-out (B≤A-0.4 [mm]) the shim must be reduced on the corresponding driving side.

Usually the addition/removal of a 1 [mm] shim reduces/increases the toe-in by approx. 0.5 [mm].

At the end of the operations, fasten the steering box screws at the specified tightening torque.

**Steering box screws: 45.0 Nm**

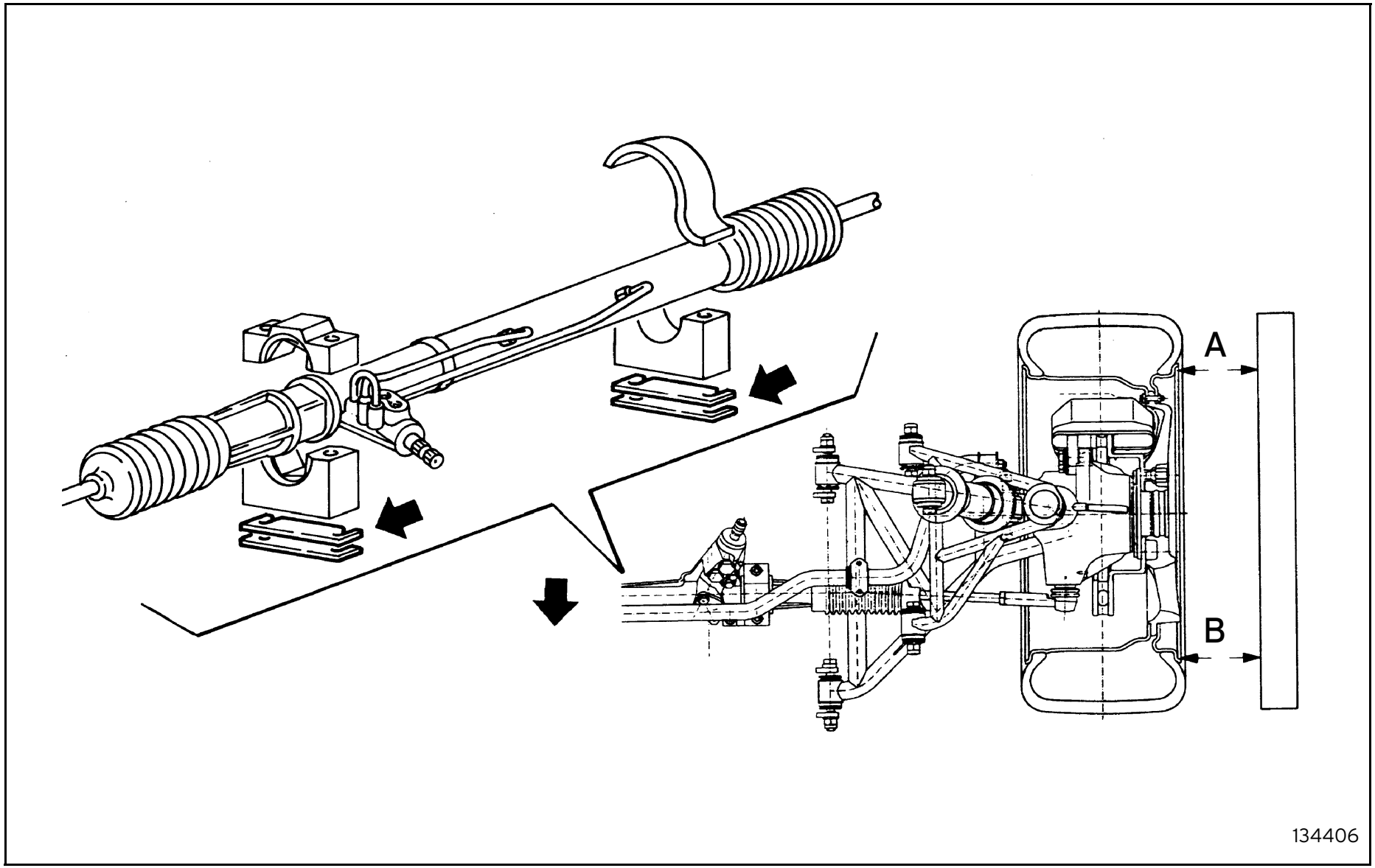


Fig. 6 - Steering box shimming

**Lifting system maintenance**

a) Air bleeding from the system

The system is self-bleeding. Therefore after removal and refitting of one or more hydraulic connections, operate the system 3 or 4 times raising and lowering the car.

If this is not sufficient, operate on bleeding screw (4) taking care if liquid under pressure escapes.

In this case the bleeding should only be carried out with the engine switched off.

The connection can also be used to discharge the system pressure if it is necessary to disconnect a hydraulic connection.

b) Oil level check

The oil level must always be between the "min" and "max." notches on the float in the reservoir. Top up with the prescribed oil if necessary.

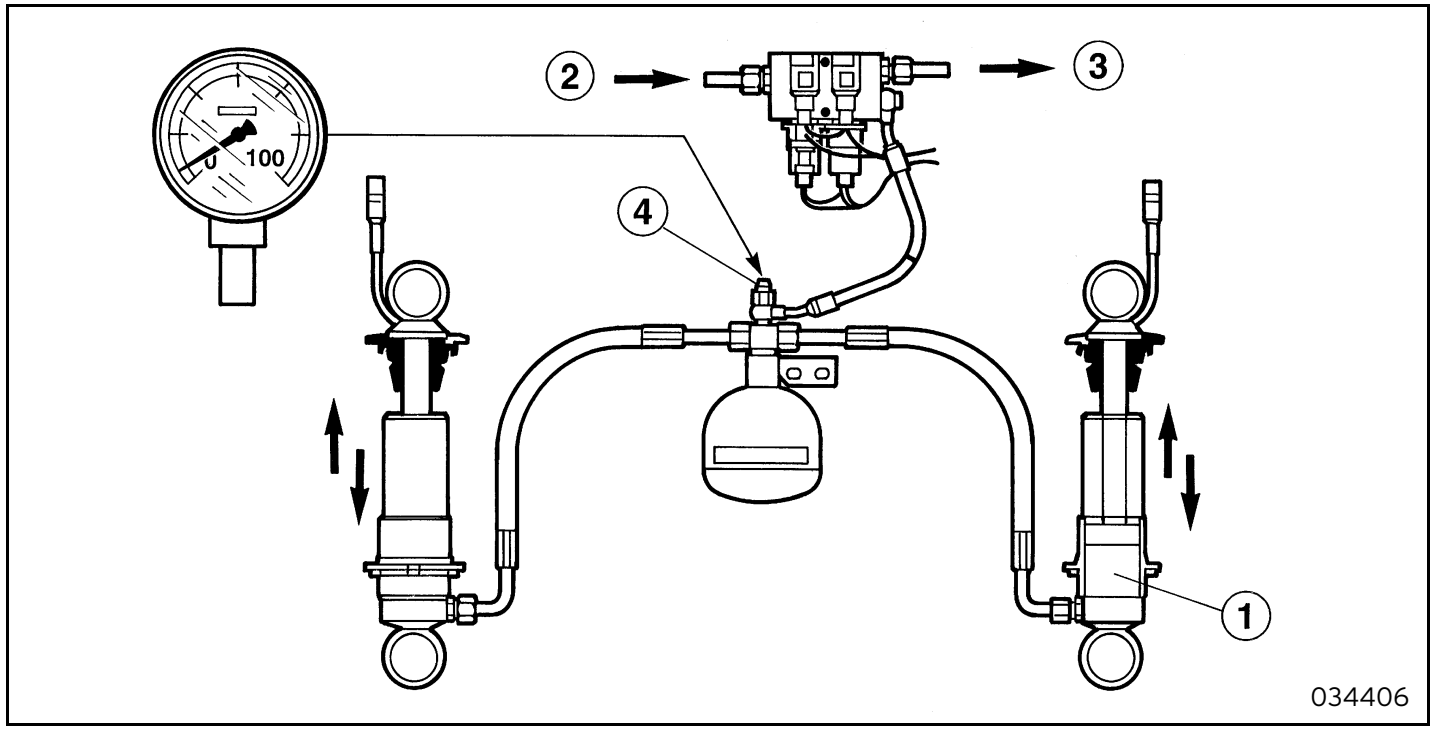


1 Shock absorber lower chamber
2 From flow divider
3 To power steering reservoir
4 Bleeding valve and pressure relief point

Fig. 7 - Lifting system operation

Caution – high pressure.
Always wear gloves and goggles.
Do not use your hands to find pressure leaks.
Fluids escaping under pressure can have sufficient force to cause skin injuries.

## DIAGNOSTICS

**Description of operation and diagnostics procedure for lifting system and shock absorbers electronic control system**
The KONI shock absorbers electronic control system can be adjusted to 4 different damping settings: 1 = soft setting; 4 = stiff setting.
This is possible through the electric motor inside each shock absorber that allows the selection of a gauged opening (4 different diameters are available).
The four different settings can be set automatically by the control unit according to the speed of the car, or they can be set manually by the driver. For safety reasons, the only possible manual selections are stiffer than those of the "automatic" system.
A selection of "automatic" mode is by pressing the "AUTO" button on the control panel located on the tunnel, whereas the manual control is obtained by pressing the button corresponding to the required setting; an impossible choice is simply refused by the system.
The system is equipped with a safety procedure that in the case of malfunctioning, besides signalling the problem by the flashing of the "ERROR" LED (Stage A of the diagnostics procedure that follows further on), also positions the shock absorbers on position no. 3 where they remain until the problem is eliminated.
There is also a procedure that can be activated if there are doubts as to the system functioning.

Moreover the system can recognise the following lifting system errors:
- system pressure indicated simultaneously by two pressure switches as under 25 bar and over 80 bar (one or both pressure switches damaged or disconnected).
- Car ascending or descending time more than 120 seconds (hydraulic or solenoid valve problem).
- Wrong car speed indication (in this case also the fault adjustment LED for the shock absorbers control system will indicate a fault).

In all three cases the ECU will command the system to DOWN position, and at the same time the light on the dashboard will flash very quickly.

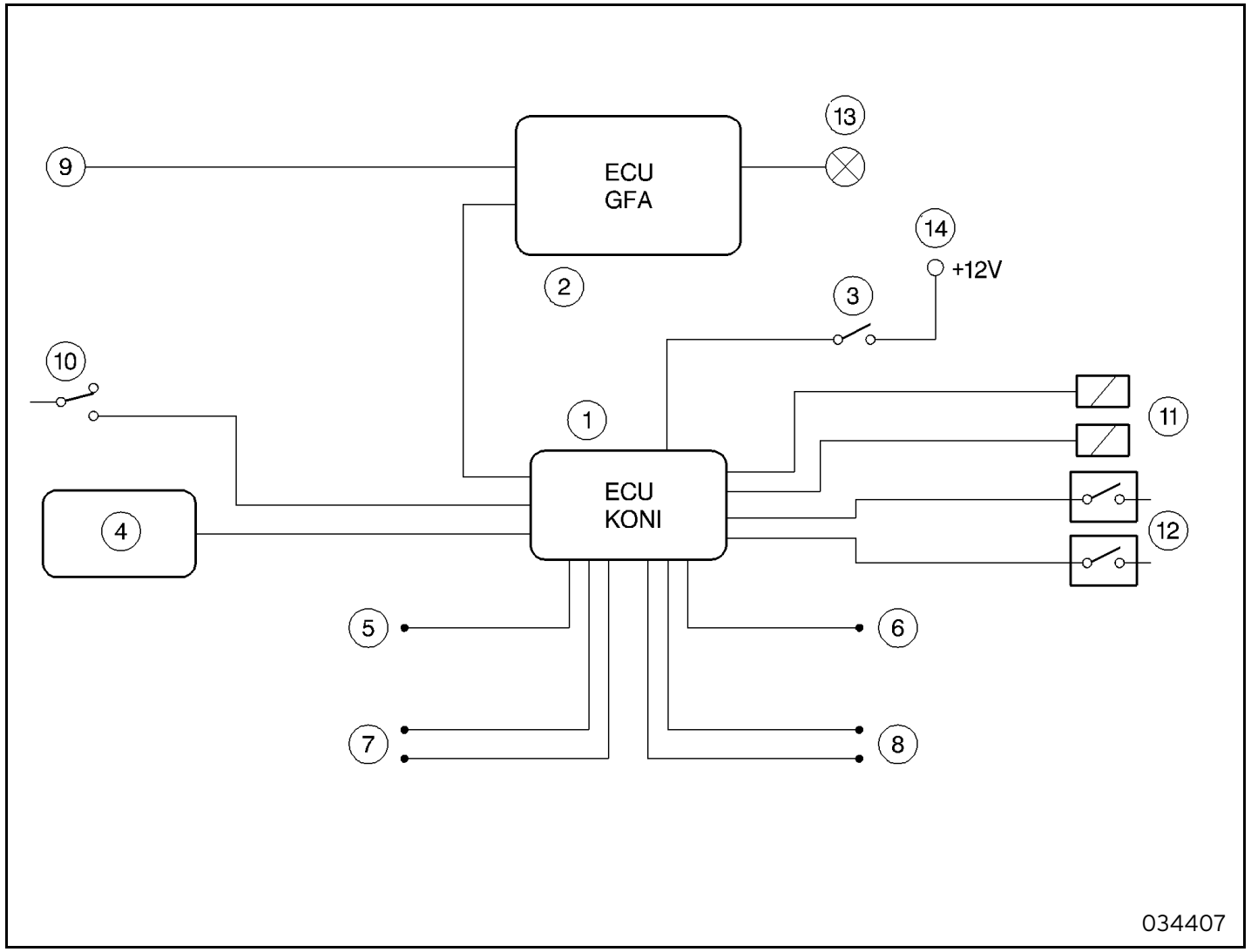


1 KONI control unit
2 GFA control unit
3 diagnostics switch
4 keypad
5 front left-hand shock absorber
6 front right-hand shock absorber
7 rear left-hand shock absorbers
8 rear right-hand shock absorbers
9 car speed indicator
10 lifting system button
11 lifting system solenoid valves
12 lifting system pressure switches
13 lifting system warning light
14 +12 V power supply

Fig. 8 - Shock absorbers and lifting system control diagram

**Description of diagnostics procedure**

Before starting any tests or diagnostics check the following:
- that there are no leaks from the hydraulic system or connections;
- that all electrical connections are tight and that there is no dirt, water or other matter inside the connectors;

The procedure is divided into two stages:
A. Detection of a generic fault
B. Pinpointing and assessment of the type of fault.

Stage A is always active and in the case of a fault, indicates this by a slow flashing (0.6 Hz) of the "ERROR" warning lamp.
Stage B (consisting of 3 levels of test) must be specifically activated by the following procedure:
- ignition key in OFF position
- set switch A under the dashboard on the right to "DIAGNOSIS".
- set ignition key to ON

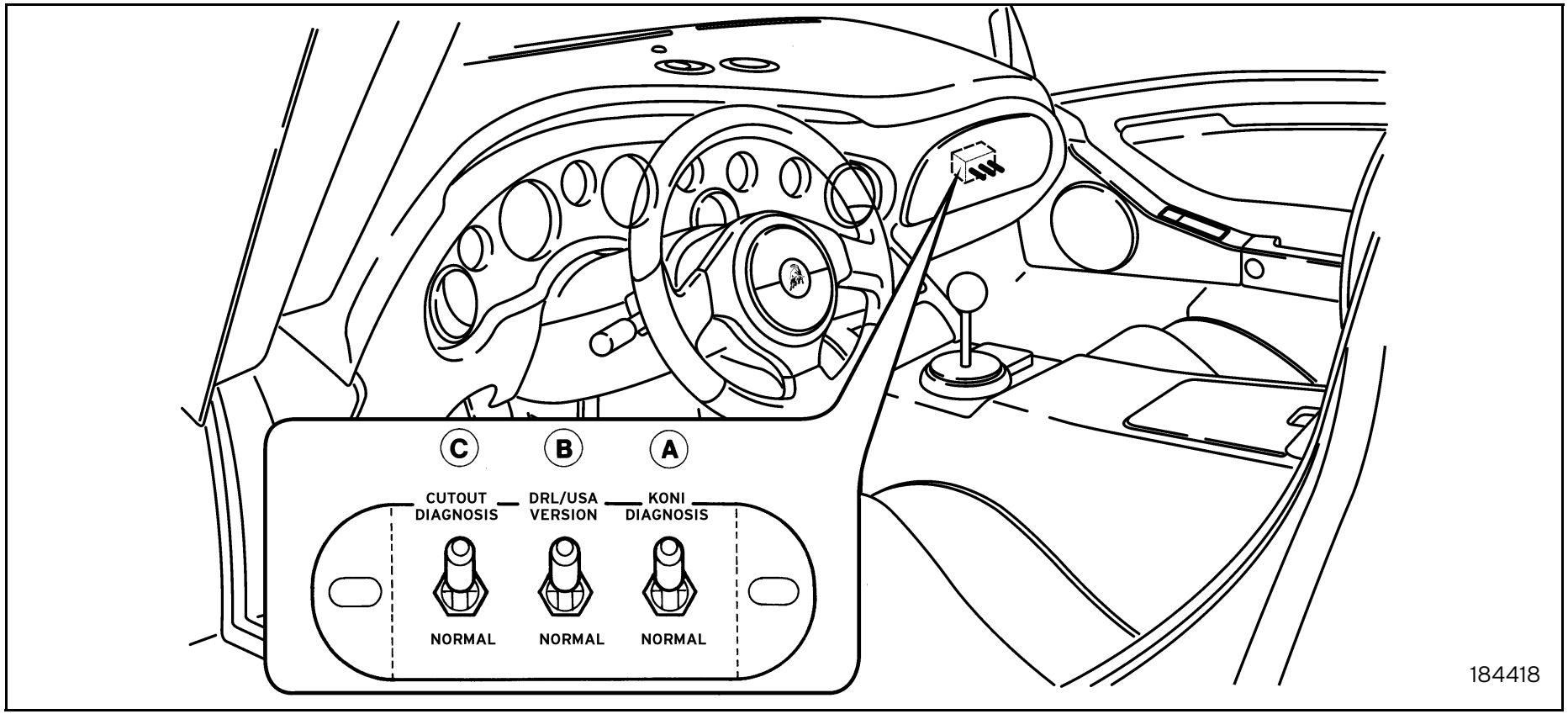


Fig. 9 - Diagnostic test enable switch A

Do not touch the other switches on the front of the vehicle on-board interface. For your information, the function of the buttons are:
B. DRL device (lights on at start-up) off switch
C. Utility off switch.

**1st TEST LEVEL**

This test is run to check the presence of a malfunction and its position.

- press the "AUTO" button on the keypad
- the "ERROR" warning lamp flashes slowly (0.6 Hz), indicating that the system is ready for the test.
- press the "AUTO" button again.

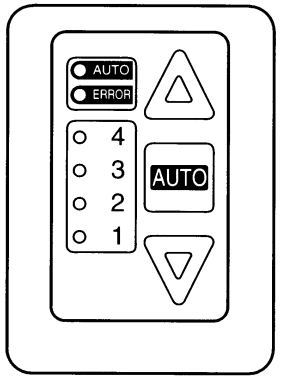


Fig. 10 - Keypad

The system now starts the testing of each separate shock absorber; if the system finds one or more shock absorbers that do not "respond" correctly, after a few seconds it will produce a series of codes, by the flashing of the "ERROR" lamp:

| | |
|---|---|
| 1 flash | = front left shock absorber |
| 2 flashes | = front right shock absorber |
| 3 flashes | = rear left shock absorber (couple) |
| 4 flashes | = rear right shock absorber (couple) |

Example: Error in the front left and rear right shock absorbers.

Fig. 11 - Warning lamp flashing sequence

If the shock absorbers respond correctly, after a few seconds the "ERROR" warning lamp will flash quickly (5Hz).

**2nd TEST LEVEL**

If some kind of system malfunctioning was detected in the previous test, with this second test it can be ascertained whether the problem involves one or more shock absorbers or the rest of the system.

- press the "AUTO" button

The "ERROR" warning lamp flashes slowly (0.6 Hz) indicating that the system is ready for the test.

- press "AUTO" again.

Use a tester to check that the voltage values on the connector (electrical system side) relating to the shock absorber are:

between SIGNAL / EARTH 0.7 < V < 1.3 (PIN 2 / PIN3)
between POSITIVE / EARTH 10 < V < 15 (PIN 1 / PIN 3).

If the voltage values are within this range there are no problems on the electrical connections and the fault is on the shock absorber.

**3rd TEST LEVEL**

This test checks the speed signal coming from the vehicle speed sensor and filtered by the GFA control unit.

- press the "AUTO" button

The "ERROR" warning lamp flashes slowly (0.6 Hz) indicating that the system is ready for the test.

- press the AUTO button again.

The "ERROR" warning lamp remains permanently on, then starts to flash as soon as it receives the speed signal (car moving at more than 10 Km/h).
If the warning light remains permanently on, check the vehicle speed booster wiring (no speed signal).

This terminates the diagnostics procedure. To repeat it, turn the ignition key to OFF, then ON again.
To return to normal functioning, bring switch A under the dashboard to the initial position.