Index

45 - WHEELS

Contents

CONTENTS

SPECIFICATIONS AND DATA P. 3

ASSEMBLY P. 4

CHECKS AND ADJUSTMENTS P. 5
Flat tyres

WHEEL RIMS P. 7
Inspections

SPECIFICATIONS AND DATA

Rims Front Rear	 8.5 J 18 H 2 ET 64 13 J 18 H 2 ET 39.4
PIRELLI tyres Front Rear	 PZero 235/35 ZR18 PZero 335/30 ZR 18
Pressure when cold Front Rear	 2.6 bar 2.5 bar

ASSEMBLY

Tighten the wheel fixing screws to a torque of 98 Nm (9.8 Kgm).
The wheels, with the tyres fitted, must be statically and dynamically balanced by a balancing machine with the special counterweights.
If front wheel vibrations persist after balancing, check the bearings and steering joints clearance.
Periodically check that the counterweights are still fitted to the rims. Wheels that are not perfectly balanced, besides causing uneven wear on the tyres, also cause steering and road holding problems.

⚠ The Pirelli P Zero tyres are to be fitted with the word "ESTERNO" (outer) on the visible side of the rim.
These tyres cannot be rotated on their rims as they are asymmetric.

CHECKS AND ADJUSTMENTS

Keep a moderate speed for the first 1500 km when the tyres are new, as they need an initial running-in period before reaching their top performance.
Do not stress the tyres excessively when they are still cold. To reach the necessary warming up it is advisable to cover at least 20 Km avoiding abrupt acceleration and high speeds.
Even when there is no evident wear of the tread, the tyres can change some of their characteristics because of chemical ageing of the component materials. After some years resistance to high speeds and road adherence may deteriorate.
If in doubt have the tyres checked by an expert and replace them in any case four years after their installation.
The wear indicator on the tyres may be used as a warning that it is time to replace them.
Check the inflation pressure carefully at least once every two weeks when the tyres are cold, and always before a long journey.
When the car leans to the right (or left) when accelerating and to the left (or right) when released, carefully check their condition and the inflation pressure.

Flat tyres

The car is not equipped with a spare wheel, therefore in the case of a flat tyre a temporary repair can be made using the special tyre inflator provided in the tool kit.

The inflator pressurises the tyre sufficiently to be able to continue the journey, driving slowly.

Scrupulously follow the instructions on the inflator and do not use alternative products, since this product has been specifically developed by AGIP for use on our cars.

After using the inflator, the car is to be considered in an emergency condition: therefore it is important to drive very carefully without exceeding 120 Km/h.
Repairs on class "ZR" tyres are not considered to be sufficiently reliable because of the high speeds and temperatures they can attain.

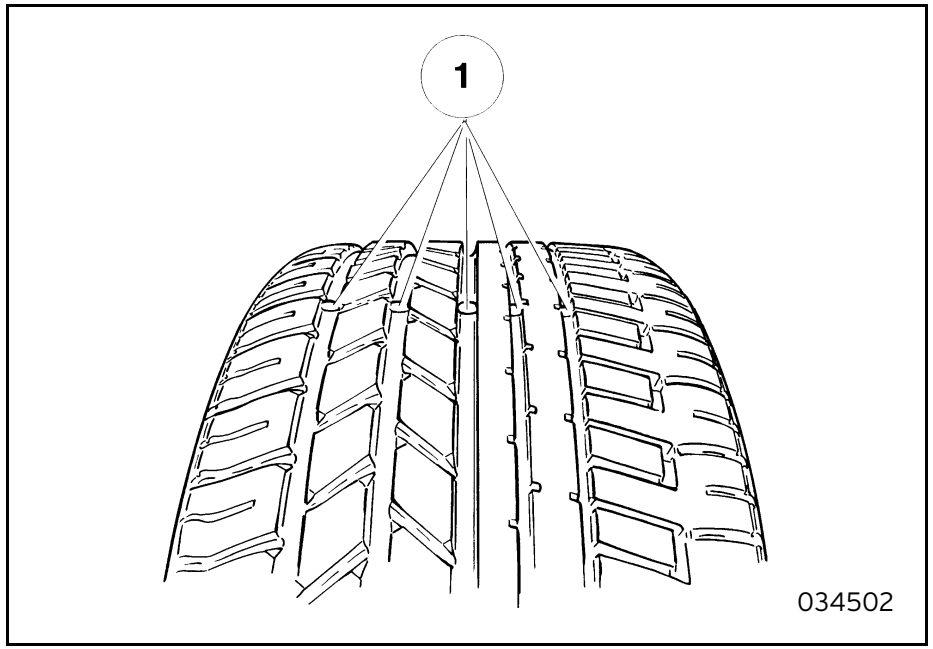

Fig. 1 - Tyre wear indicators

WHEEL RIMS

The wheel rim painting complies to specific certifications regarding the anti-rust characteristics and duration over time. Any subsequent alternative painting will release the supplier from any liabilities in merit.

Inspections

When changing the tyres or whenever the rims are disassembled, it is necessary to check that the isolating elements (arrow) on the rim are intact.
If these elements are found worn or damaged it is most important that they be replaced.
If they are not, alterations could occur in the rim which would jeopardise the functionality.

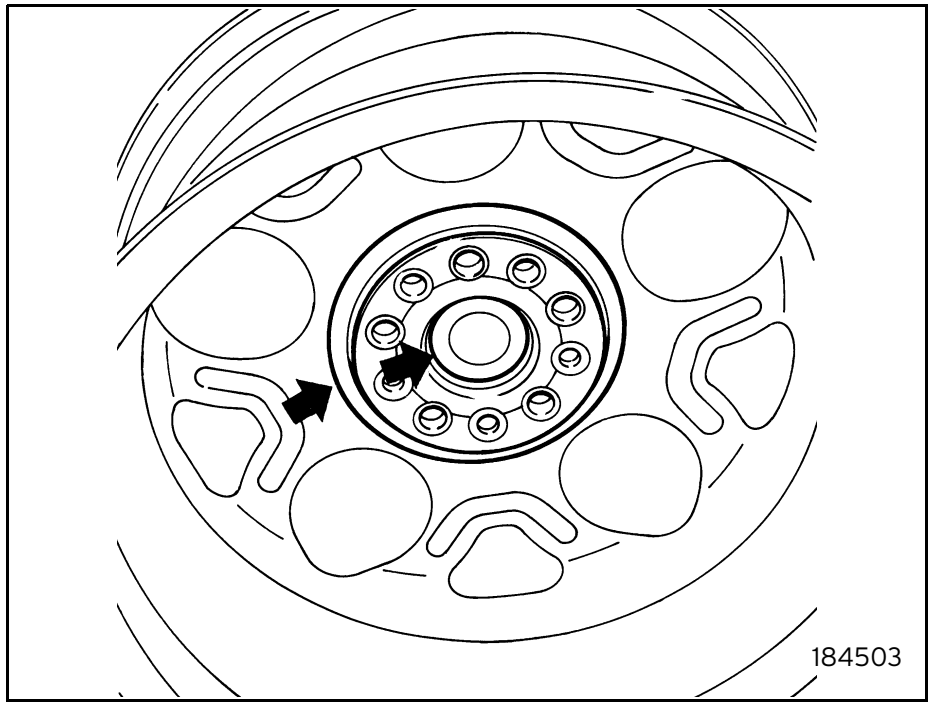

Fig. 2 -