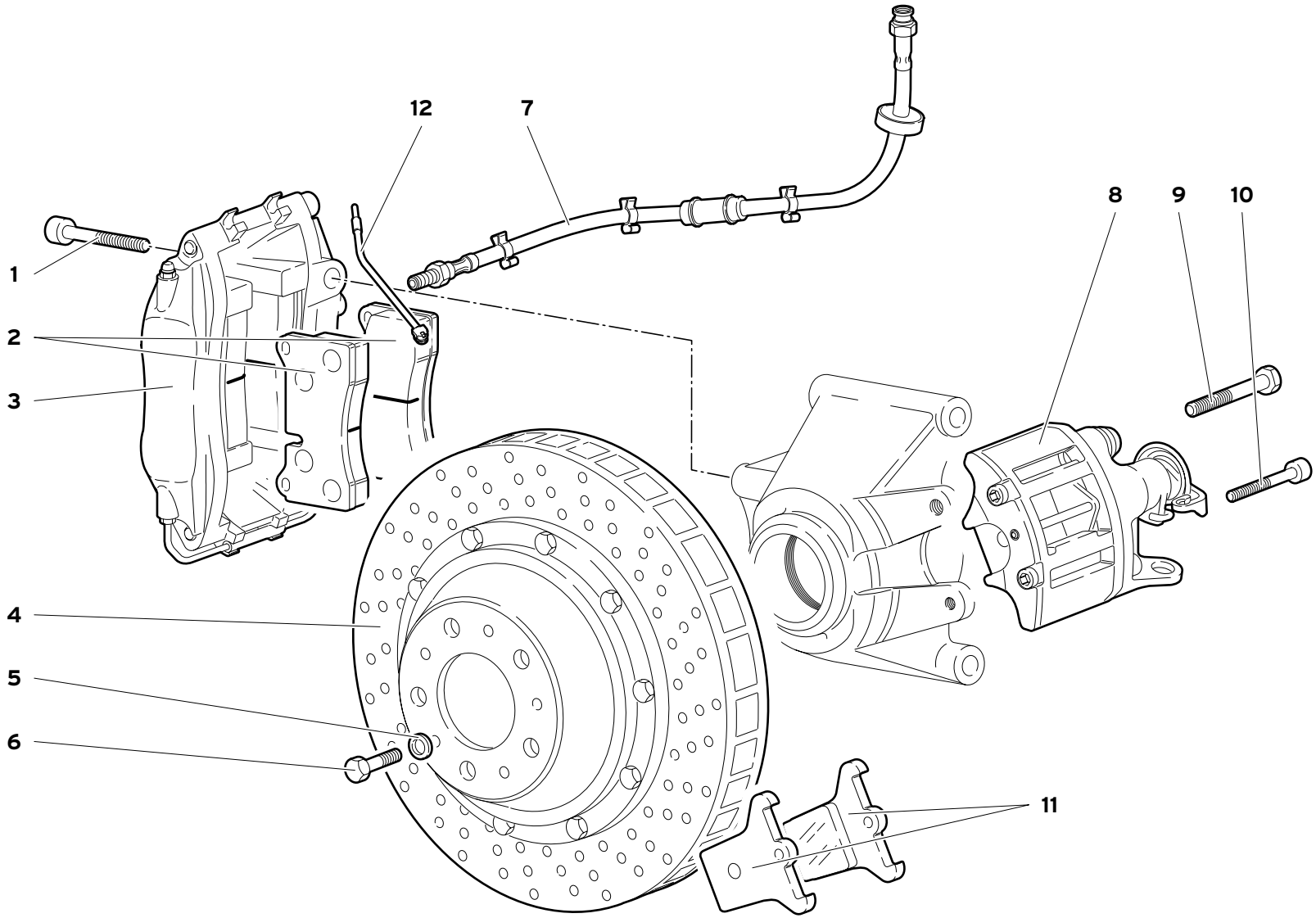
12
7
8
9
10
1
2
3
4
5
6
11

Rif. Ref. Réf. Bez. Ref.	Codice Part number Numero des pièces Teilnummer Codigo	Q.tà Q.ty Q.té Stk. C.dad	Versione Version Version Version Versión	DESCRIZIONE	DESCRIPTION	DESCRIPTION	BESCHREIBUNG	DESCRIPCION
1	008701224	4		VITE	SCREW	VIS	SCHRAUBE	TORNILLO
2	0032000561	1		KIT PASTIGLIE FRENO	BRAKE PADS KIT	PASTILLE	SCHEIBE	TABLETA
3	0032001458	1		PINZA FRENI SX	LEFT BRAKE CALIPER	ETRIER DE FREINS	BREMSSATTEL	ZAPATA DE FRENO
3	0032001459	1		PINZA FRENI DX	RIGHT BRAK. CALIPER	ETRIER DE FREINS	BREMSSATTEL	ZAPATA DE FRENO
4	0032006308	2		DISCO FRENO	BRAKE DISC	DISQUE DE FREIN	BREMSSCHEIBE	DISCO DE FRENO
5	008410810	6		RONDELLA	WASHER	RONDELLE	SCHEIBE	ARANDELA
6	008100826	6		VITE	SCREW	VIS	SCHRAUBE	TORNILLO
7	003229882	2		TUBO FLESSIBILE	FLEX. HOSE	TUYAU FLEXIBLE	SCHLAUCH	MANGA FLEXIBLE
8	0033001460	1		PINZA FRENI SX	LEFT BRAKE CALIPER	ETRIER DE FREINS	BREMSSATTEL	ZAPATA DE FRENO
8	0033001461	1		PINZA FRENI DX	RIGHT BRAK. CALIPER	ETRIER DE FREINS	BREMSSATTEL	ZAPATA DE FRENO
9	008101073	2		VITE	SCREW	VIS	SCHRAUBE	TORNILLO
10	008700854	2		VITE	SCREW	VIS	SCHRAUBE	TORNILLO
11	0033002402	4		PASTIGLIE	BRAKE PADS	PASTILLE	SCHEIBE	TABLETA
12	003135643	2		CAVO ELETTRICO	ELECT CABLE	CABLE	LEITUNG	CABLE

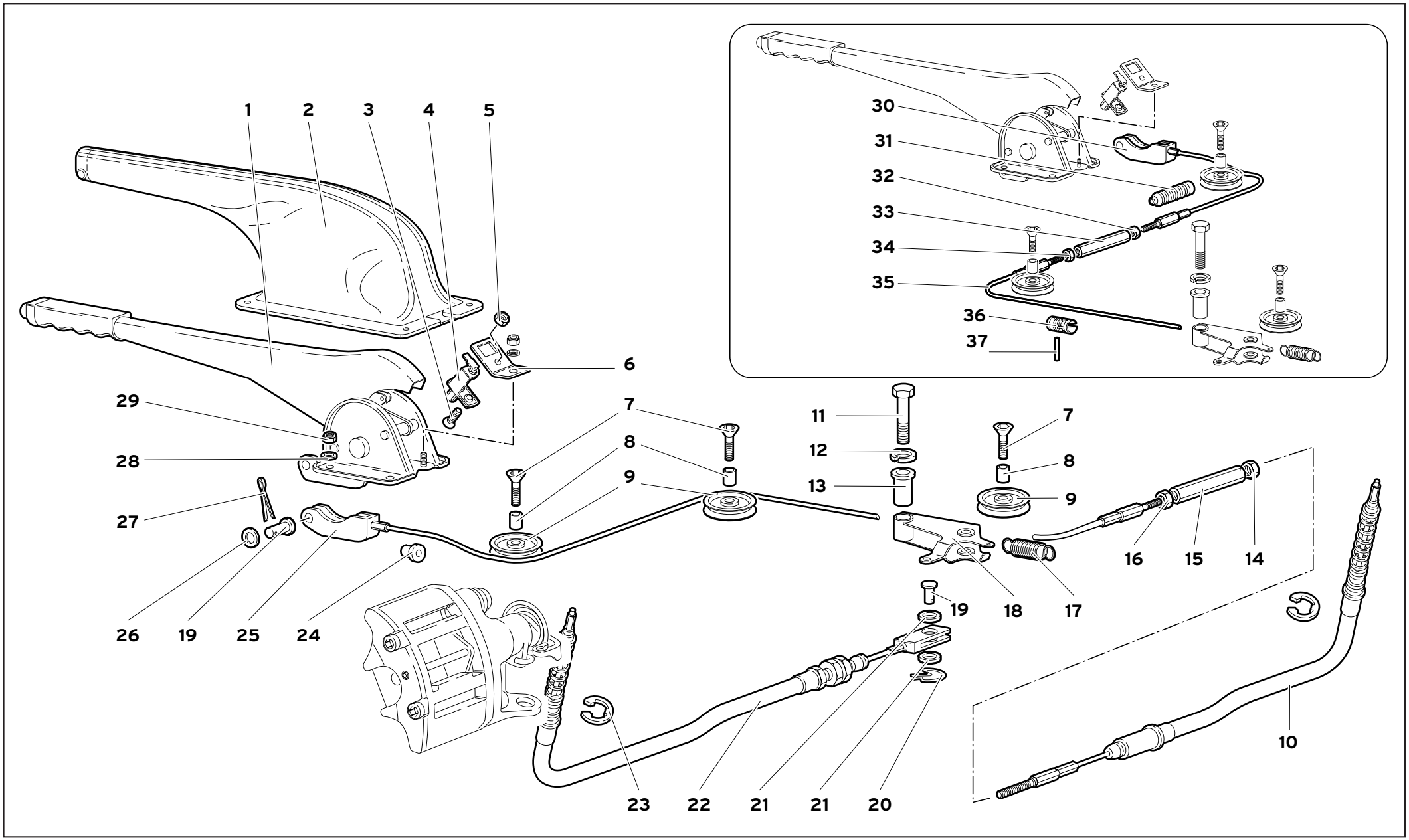

33	MY 99	FRENO A MANO HANDBRAKE FREIN A MAIN HANDBREMSE FRENO A MANO	33.01.00

Diablo IV
07/1999

Rif. Ref. Réf. Bez. Ref.	Codice Part number Numero des pièces Teilnummer Codigo	Q.tà Q.ty Q.té Stk. C.dad	Versione Version Version Version Versión	DESCRIZIONE	DESCRIPTION	DESCRIPTION	BESCHREIBUNG	DESCRIPCION
1	0033000780	1		LEVA FRENO A MANO	HANDBRAKE LEVER	LEVIER	HEBEL	PALANCA
2	0078001360	1		RIVESTIMENTO	COVERING	REVETEMENT	VERKLEIDUNG	FORRO
3	008700404	1		VITE	SCREW	VIS	SCHRAUBE	TORNILLO
4	003336007	1		PULSANTE	BUTTON	BOUTON	DRUCKKNOPF	PULSADOR
5	008200406	1		DADO	NUT	ECROU	MUTTER	TUERCA
6	003335993	1		SUPPORTO	SUPPORT	SUPPORT	LAGER	SOPORTE
7	008700851	3		VITE	SCREW	VIS	SCHRAUBE	TORNILLO
8	003330827	3		BOCCOLA	BUSHING	DOUILLE	BUECHSE	CASQUILLO
9	003332512	3		CARRUCOLA	PULLEY	POULIE	SEILROLLE	ROLADANA
10	0033001133	1		TIRANTE DX	RIGHT TIE ROD	TIRANT	STANGE	VARILLA
11	008101407	1		VITE	SCREW	VIS	SCHRAUBE	TORNILLO
12	008411404	1		RONDELLA	WASHER	RONDELLE	SCHEIBE	ARANDELA
13	003330828	1		DISTANZIALE	SPACER	ENTRETOISE	ABSTANDSTUECK	SEPARADOR
14	008200607	1		DADO	NUT	ECROU	MUTTER	TUERCA
15	003304858	1		TESTA REGISTRO	ADJUSTING SLEEVE	EMBOUT DE REGLAGE	EINSTELLBUECHSE	TUERCA DE REGLA.
16	008200603	1		DADO	NUT	ECROU	MUTTER	TUERCA
17	003330829	1		MOLLA	SPRING	RESSORT	FEDER	RESORTE
18	003333935	1		SUPPORTO	SUPPORT	SUPPORT	LAGER	SOPORTE
19	003301307	2		PERNO	PIN	AXE	BOLZEN	EJE
20	008820203	1		COPPIGLIA	CLIP	AGRAFE	KLEMMSTUECK	SUJETADOR
21	008400806	2		RONDELLA	WASHER	RONDELLE	SCHEIBE	ARANDELA
22	0033001131	1		TIRANTE SX	LEFT TIE ROD	TIRANT	STANGE	VARILLA
23	008581302	2		ANELLO RITEGNO	RETAINER RING	ARRETOIR	HALTERING	RETENEDOR
24	003330880	1		BOCCOLA GOMMA	RUBBER BUSHING	BAGUE CAOUTCHOUC	GUMMIBUECHSE	COJINETE DE CAUC.
25	0033001129	1		TIRANTE	TIE ROD	TIRANT	STANGE	VARILLA
26	008400806	1		RONDELLA	WASHER	RONDELLE	SCHEIBE	ARANDELA
27	008820201	1		COPIGLIA	SPLIT PIN	GOUPILLE FENDUE	SPLINT	PASADOR ABIERTO
28	008400606	4		RONDELLA	WASHER	RONDELLE	SCHEIBE	ARANDELA
29	008200606	4		DADO	NUT	ECROU	MUTTER	TUERCA
30	0033001472	1	74	TIRANTE	TIE ROD	TIRANT	STANGE	VARILLA
30	0033001472	1	76	TIRANTE	TIE ROD	TIRANT	STANGE	VARILLA
31	003332748	1	74	PROTEZIONE	SHIELD	PROTECTION	ABDECKUNG	DEFENSA
31	003332748	1	76	PROTEZIONE	SHIELD	PROTECTION	ABDECKUNG	DEFENSA
32	008200607	1	74	DADO	NUT	ECROU	MUTTER	TUERCA
32	008200607	1	76	DADO	NUT	ECROU	MUTTER	TUERCA
33	003304858	2	74	REGISTRO	ADJUSTING SLEEVE	EMBOUT DE REGLAGE	EINSTELLBUECHSE	TUERCA DE REGLA.
33	003304858	2	76	REGISTRO	ADJUSTING SLEEVE	EMBOUT DE REGLAGE	EINSTELLBUECHSE	TUERCA DE REGLA.

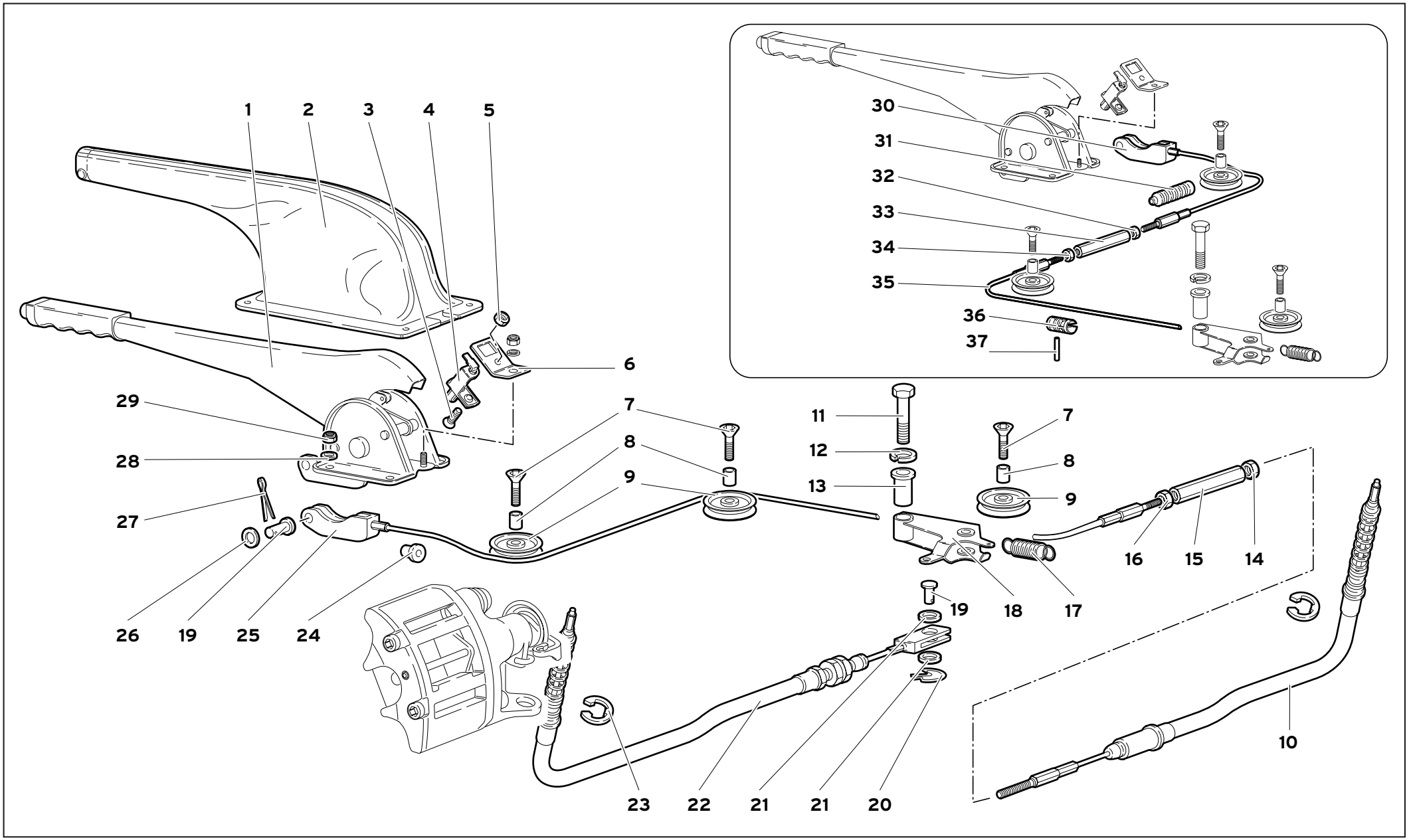

33	MY 99	FRENO A MANO HANDBRAKE FREIN A MAIN HANDBREMSE FRENO A MANO	33.01.00

Diablo IV
07/1999

Rif. Ref. Réf. Bez. Ref.	Codice Part number Numero des pièces Teilnummer Codigo	Q.tà Q.ty Q.té Stk. C.dad	Versione Version Version Version Versión	DESCRIZIONE	DESCRIPTION	DESCRIPTION	BESCHREIBUNG	DESCRIPCION
34	008200603	1	74	DADO	NUT	ECROU	MUTTER	TUERCA
34	008200603	1	76	DADO	NUT	ECROU	MUTTER	TUERCA
35	003332749	1	74	TIRANTE	TIE ROD	TIRANT	STANGE	VARILLA
35	003332749	1	76	TIRANTE	TIE ROD	TIRANT	STANGE	VARILLA
36	003330824	1	74	BOCCOLA	BUSHING	DOUILLE	BUECHSE	CASQUILLO
36	003330824	1	76	BOCCOLA	BUSHING	DOUILLE	BUECHSE	CASQUILLO
37	008900204	1	74	SPINA	PIN	GOUPILLE	STIFT	PASADOR
37	008900204	1	76	SPINA	PIN	GOUPILLE	STIFT	PASADOR

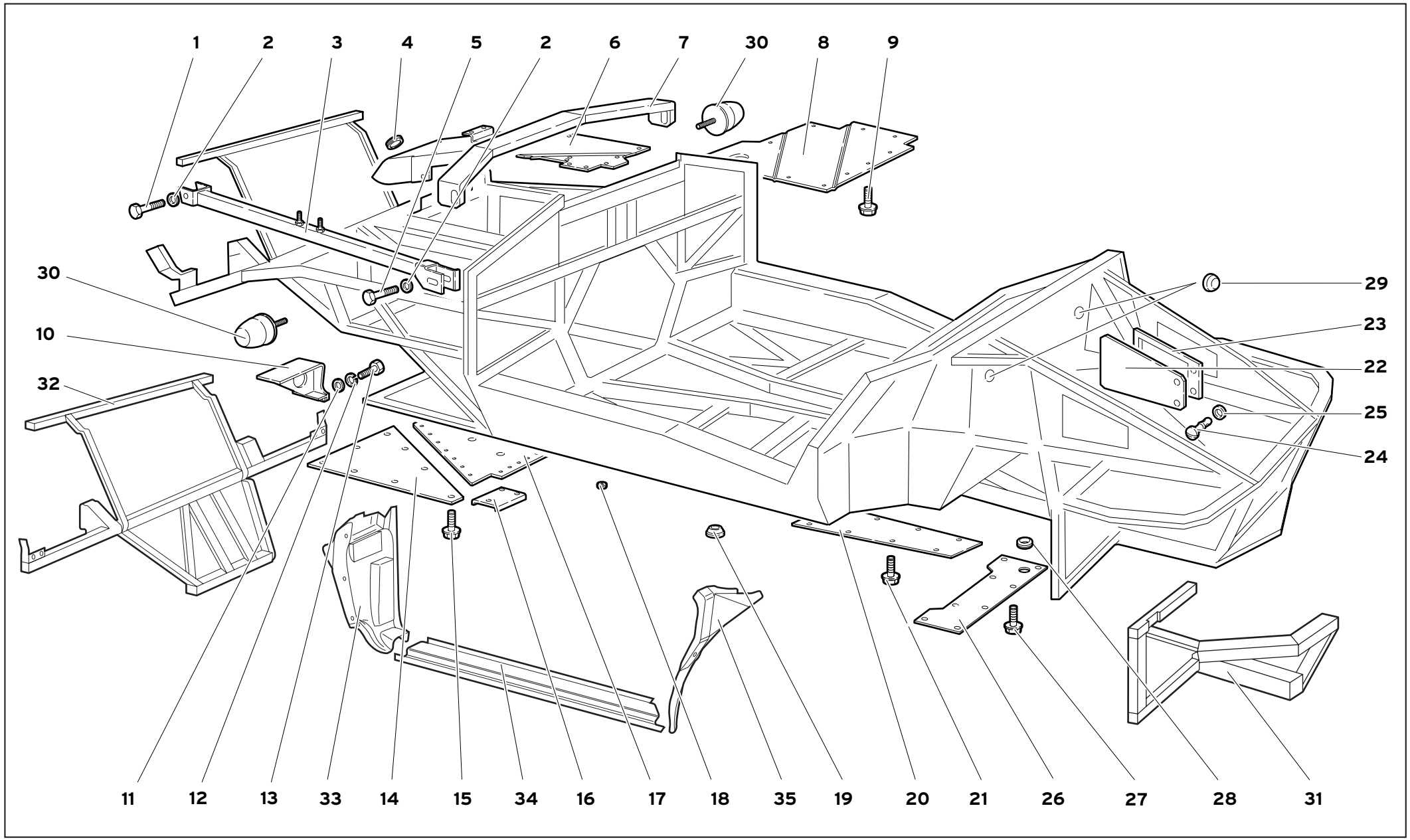

41	MY 99	ELEMENTI TELAIO FRAME ELEMENTS ELEMENTS CHASSIS RAHMENELEMENTE ELEMENTOS DEL CHASIS	41.01.00	Diablo JV 07/1999

Rif. Ref. Réf. Bez. Ref.	Codice Part number Numero des pièces Teilnummer Codigo	Q.tà Q.ty Q.té Stk. C.dad	Versione Version Version Version Versión	DESCRIZIONE	DESCRIPTION	DESCRIPTION	BESCHREIBUNG	DESCRIPCION
1	008100854	2		VITE	SCREW	VIS	SCHRAUBE	TORNILLO
2	008400820	4		RONDELLA	WASHER	RONDELLE	SCHEIBE	ARANDELA
3	004133595	1		TRAVERSA SX	LEFT CROSSRAIL	TRAVERSE	TRAVERSE	TRAVESANO
3	004133596	1		TRAVERSA DX	RIGHT CROSSRAIL	TRAVERSE	TRAVERSE	TRAVESANO
4	008611606	2		ANELLO GOMMA	RUBBER RING	BAGUE CAOUTCHOUC	GUMMIRING	GUARNICION
5	008700846	2		VITE	SCREW	VIS	SCHRAUBE	TORNILLO
6	009411522	1		SUPPORTO DX	RIGTH SUPPORT	SUPPORT	LAGER	SOPORTE
6	009411523	1		SUPPORTO SX	LEFT SUPPORT	SUPPORT	LAGER	SOPORTE
7	004131512	1		TRAVERSA	CROSSRAIL	TRAVERSE	TRAVERSE	TRAVESANO
8	004135417	1		PANNELLO	PANEL	PANNEAU	VERKLEIDUNG	CONTRAPANEL
9	008700660	11		VITE	SCREW	VIS	SCHRAUBE	TORNILLO
10	004137167	1		SUPPORTO SERBATOIO BENZINA	SUPPORT	SUPPORT	LAGER	SOPORTE
11	008400801	2		RONDELLA	WASHER	RONDELLE	SCHEIBE	ARANDELA
12	008410820	2		RONDELLA	WASHER	RONDELLE	SCHEIBE	ARANDELA
13	008100812	2		VITE	SCREW	VIS	SCHRAUBE	TORNILLO
14	004135426	1		PANNELLO	PANEL	PANNEAU	VERKLEIDUNG	CONTRAPANEL
15	008700660	8		VITE	SCREW	VIS	SCHRAUBE	TORNILLO
16	004133887	2		RINFORZO	REINFORCEMENT	RENFORT	VERSTAERKUNG	REFUERZO
17	004135423	1		PANNELLO	PANEL	PANNEAU	VERKLEIDUNG	CONTRAPANEL
18	004134333	4		TAPPO	PLUG	BOUCHON	STOPFEN	TAPON
19	004131483	8		TAPPO	PLUG	BOUCHON	STOPFEN	TAPON
20	004130445	1		PANNELLO	PANEL	PANNEAU	VERKLEIDUNG	CONTRAPANEL
21	008700660	8		VITE	SCREW	VIS	SCHRAUBE	TORNILLO
22	004130207	1		PANNELLO ISPEZIONE ALZAFARI SX	LEFT PANEL	PANNEAU	VERKLEIDUNG	CONTRAPANEL
22	004130206	1		PANNELLO ISPEZIONE ALZAFARI DX	RIGTH PANEL	PANNEAU	VERKLEIDUNG	CONTRAPANEL
23	009490205	1		GUARNIZIONE SX	LEFT GASKET	GUARNITURE	DICHTUNG	GUARNIZIONE
23	009490204	1		GUARNIZIONE DX	RIGTH GASKET	GUARNITURE	DICHTUNG	GUARNIZIONE
24	004131085	4		PERNO AGGANCIO RAPIDO	PIN	AXE	BOLZEN	EJE
25	007014263	4		RONDELLA	WASHER	RONDELLE	SCHEIBE	ARANDELA
26	004132486	1		PANNELLO	PANEL	PANNEAU	VERKLEIDUNG	CONTRAPANEL
27	008700660	8		VITE	SCREW	VIS	SCHRAUBE	TORNILLO
28	008612503	1		ANELLO GOMMA	RUBBER RING	BAGUE CAOUTCHOUC	GUMMIRING	GUARNICION
29	008931407	2		TAPPO	PLUG	BOUCHON	STOPFEN	TAPON
30	004137362	2	71	TAMPONE GOMMA	RUBBER PAD	TAMPON CAOUTCHO.	GUMMIPUFFER	TOPE DE GOMA
30	004137362	2	96	TAMPONE GOMMA	RUBBER PAD	TAMPON CAOUTCHO.	GUMMIPUFFER	TOPE DE GOMA
31	004137963	1		TELAIETTO ANT. SX	FRONT LH FRAME	CHASSIS AV. GAUCHE	RAHMEN VORD. LS	CHASIS DEL. IZQ.
31	004137964	1		TELAIETTO ANT. DX	FRONT RH FRAME	CHASSIS AV. DROIT	RAHMEN VORD. RS	CHASIS DEL. DER.
32	0041004924	1		TELAIETTO POSTERIORE	REAR FRAME	CHASSIS AR.	RAHMEN HINT.	CHASIS TRAS.

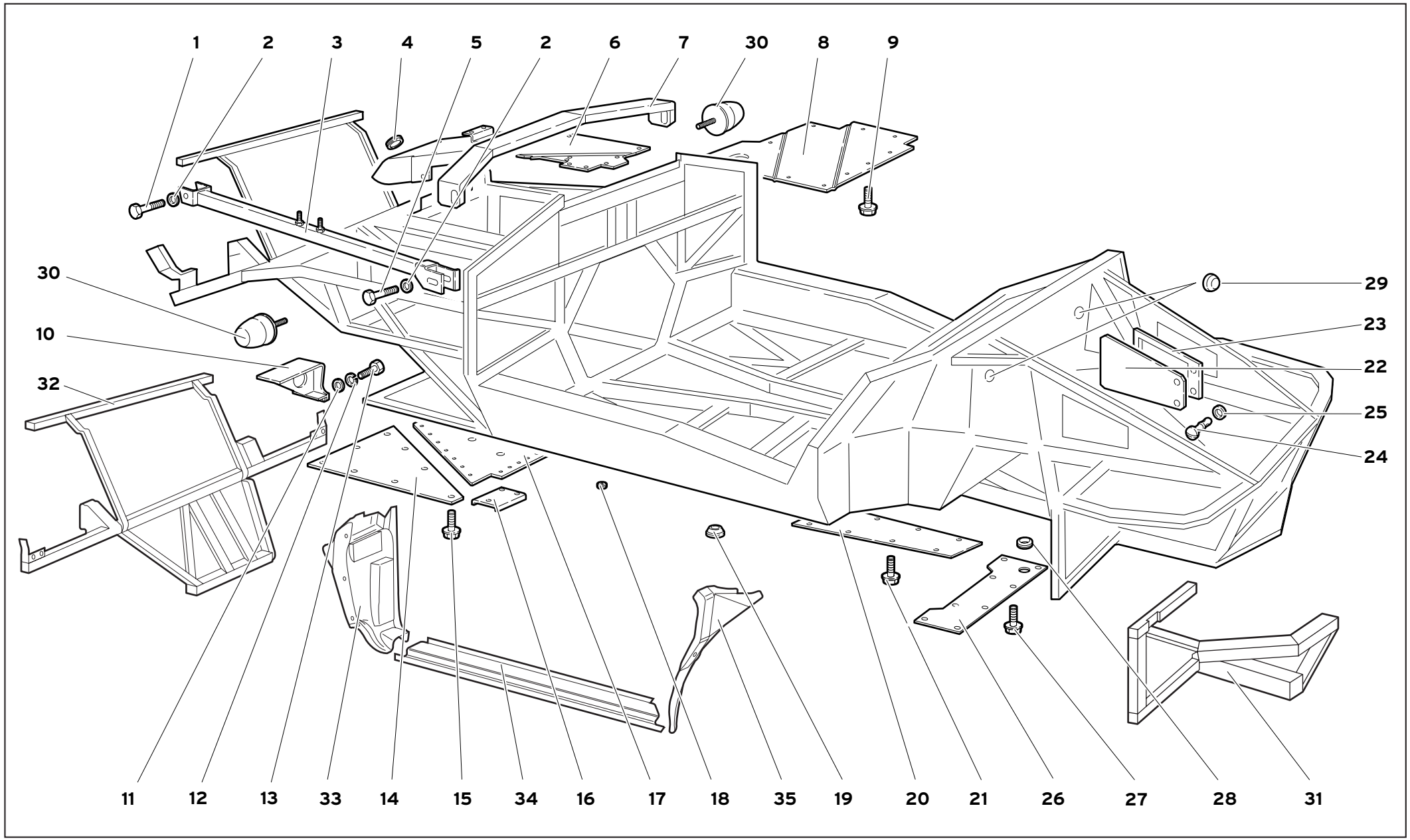

41	MY 99	ELEMENTI TELAIO FRAME ELEMENTS ELEMENTS CHASSIS RAHMENELEMENTE ELEMENTOS DEL CHASIS	41.01.00	Diablo JV 07/1999

Rif. Ref. Réf. Bez. Ref.	Codice Part number Numero des pièces Teilnummer Codigo	Q.tà Q.ty Q.té Stk. C.dad	Versione Version Version Version Versión	DESCRIZIONE	DESCRIPTION	DESCRIPTION	BESCHREIBUNG	DESCRIPCION
33	009409133	1		RIVESTIMENTO SX POSTERIORE	REAR LH COVERING	REVETEMENT AR. G.	VERKLEIDUNG HINT. LS	REVEST. IZQ. TRAS.
33	009409132	1		RIVESTIMENTO DX POSTERIORE	REAR RH COVERING	REVETEMENT AR. D.	VERKLEIDUNG HINT. RS	REVEST. DER. TRAS.
34	009409135	1		RIVESTIMENTO SX CENTRALE	MIDDLE LH COVERING	REVETEMENT G. CENT.	VERKLEIDUNG MITT. LS	REVEST. IZQ. CENT.
34	009409134	1		RIVESTIMENTO DX CENTRALE	MIDDLE RH COVERING	REVETEMENT D. CENT.	VERKLEIDUNG MITT. RS	REVEST. DER. CENT.
35	009409137	1		RIVESTIMENTO SX ANTERIORE	FRONT LH COVERING	REVETEMENT AV. G.	VERKLEIDUNG VORD. LS	REVEST. IZQ. DEL.
35	009409136	1		RIVESTIMENTO DX ANTERIORE	FRONT RH COVERING	REVETEMENT AV. D.	VERKLEIDUNG VORD. RS	REVEST. DER.. DEL.

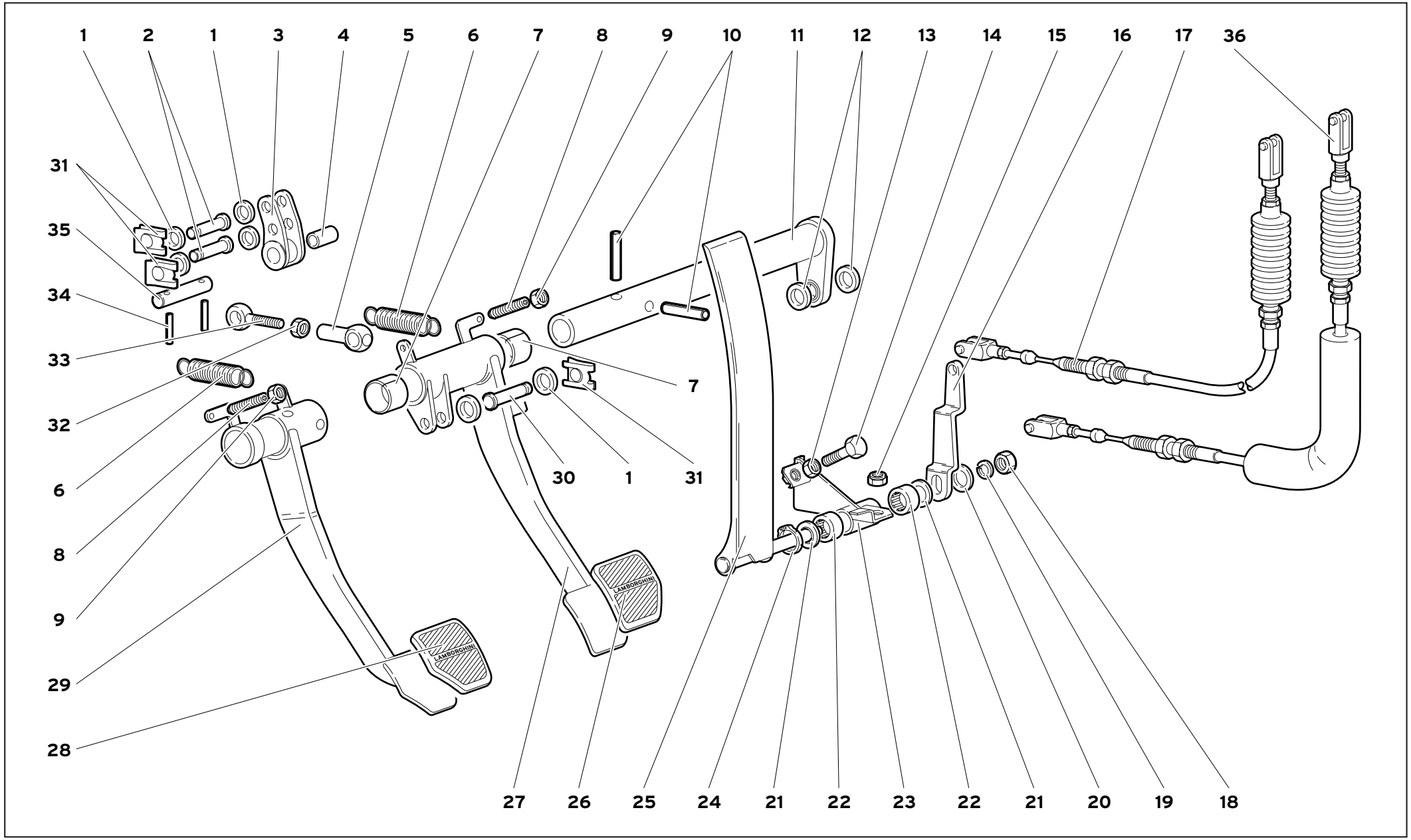

42	MY 99	PEDALS PEDALIER	**PEDALIERA**	PEDALSTEUERUNG PEDALES	42.01.00	Diablo JV 07/1999

Rif. Ref. Réf. Bez. Ref.	Codice Part number Numero des pièces Teilnummer Codigo	Q.tà Q.ty Q.té Stk. C.dad	Versione Version Version Version Versión	DESCRIZIONE	DESCRIPTION	DESCRIPTION	BESCHREIBUNG	DESCRIPCION
1	008401007	6		RONDELLA	WASHER	RONDELLE	SCHEIBE	ARANDELA
2	004232621	2		PERNO	PIN	AXE	BOLZEN	EJE
3	004225060	1		LEVA	LEVER	LEVIER	HEBEL	PALANCA
4	008801209	1		BOCCOLA	BUSHING	DOUILLE	BUECHSE	CASQUILLO
5	004225061	1		TESTA A SNODO	COUPLING	JOINT A ROTULE	GELENKKOPF	ARTICULACION
6	0042004879	2		MOLLA	SPRING	RESSORT	FEDER	RESORTE
7	008802501	2		BOCCOLA	BUSHING	DOUILLE	BUECHSE	CASQUILLO
8	004210834	2		TESTA REGISTRO	ADJUSTING SLEEVE	EMBOUT DE REGLAGE	EINSTELLBUECHSE	TUERCA DE REGLA.
9	008200604	2		DADO	NUT	ECROU	MUTTER	TUERCA
10	008900803	2		SPINA	PIN	GOUPILLE	STIFT	PASADOR
11	004225064	1		ALBERO	SHAFT	ARBRE	WELLE	ARBOL
12	008400819	2		RONDELLA	WASHER	RONDELLE	SCHEIBE	ARANDELA
13	008200801	1		DADO	NUT	ECROU	MUTTER	TUERCA
14	008100828	1		VITE	SCREW	VIS	SCHRAUBE	TORNILLO
15	008200804	2		DADO	NUT	ECROU	MUTTER	TUERCA
16	004238042	1		LEVA	LEVER	LEVIER	HEBEL	PALANCA
17	004230089	1		TIRANTE ACCELERATORE	TIE ROD	TIRANT	STANGE	VARILLA
18	008200809	1		DADO	NUT	ECROU	MUTTER	TUERCA
19	008410806	1		RONDELLA	WASHER	RONDELLE	SCHEIBE	ARANDELA
20	008400801	1		RONDELLA	WASHER	RONDELLE	SCHEIBE	ARANDELA
21	008401220	2		RONDELLA	WASHER	RONDELLE	SCHEIBE	ARANDELA
22	008521205	2		CUSCINETTO	BEARING	ROULEMENT	LAGER	RODAMIENTO
23	004231811	1		SUPPORTO	SUPPORT	SUPPORT	LAGER	SOPORTE
24	008581101	1		ANELLO RITEGNO	RETAINER RING	ARRETOIR	HALTERING	RETENEDOR
25	004230143	1		PEDALE ACCELERATORE	ACCELERATOR PEDAL	PEDALE	FUSSHEBEL	PEDAL
26	004228351	1		COPRIPEDALE GOMMA	PEDAL PAD	GARNITURE CAOUT.	FUSSHEBELUEBERZUG	FORRO DE CAUCHO
27	0042001105	1		PEDALE FRENO	BRAKE PEDAL	PEDALE	FUSSHEBEL	PEDAL
28	004228349	1		COPRIPEDALE GOMMA	PEDAL PAD	GARNITURE CAOUT.	FUSSHEBELUEBERZUG	FORRO DE CAUCHO
29	004235355	1		PEDALE FRIZIONE	CLUTCH PEDAL	PEDALE	FUSSHEBEL	PEDAL
30	004232622	1		PERNO	PIN	AXE	BOLZEN	EJE
31	008581004	3		MOLLETTA	CLIP	AGRAFE	KLEMMSTUECK	SUJETADOR
32	008201001	1		DADO	NUT	ECROU	MUTTER	TUERCA
33	004225062	1		TIRANTE	TIE ROD	TIRANT	STANGE	VARILLA
34	008900305	2		SPINA	PIN	GOUPILLE	STIFT	PASADOR
35	004225074	1		PERNO	PIN	AXE	BOLZEN	EJE
36	004236013	1	71	TIRANTE ACCELERATORE	TIE ROD	TIRANT	STANGE	VARILLA
36	004236013	1	96	TIRANTE ACCELERATORE	TIE ROD	TIRANT	STANGE	VARILLA

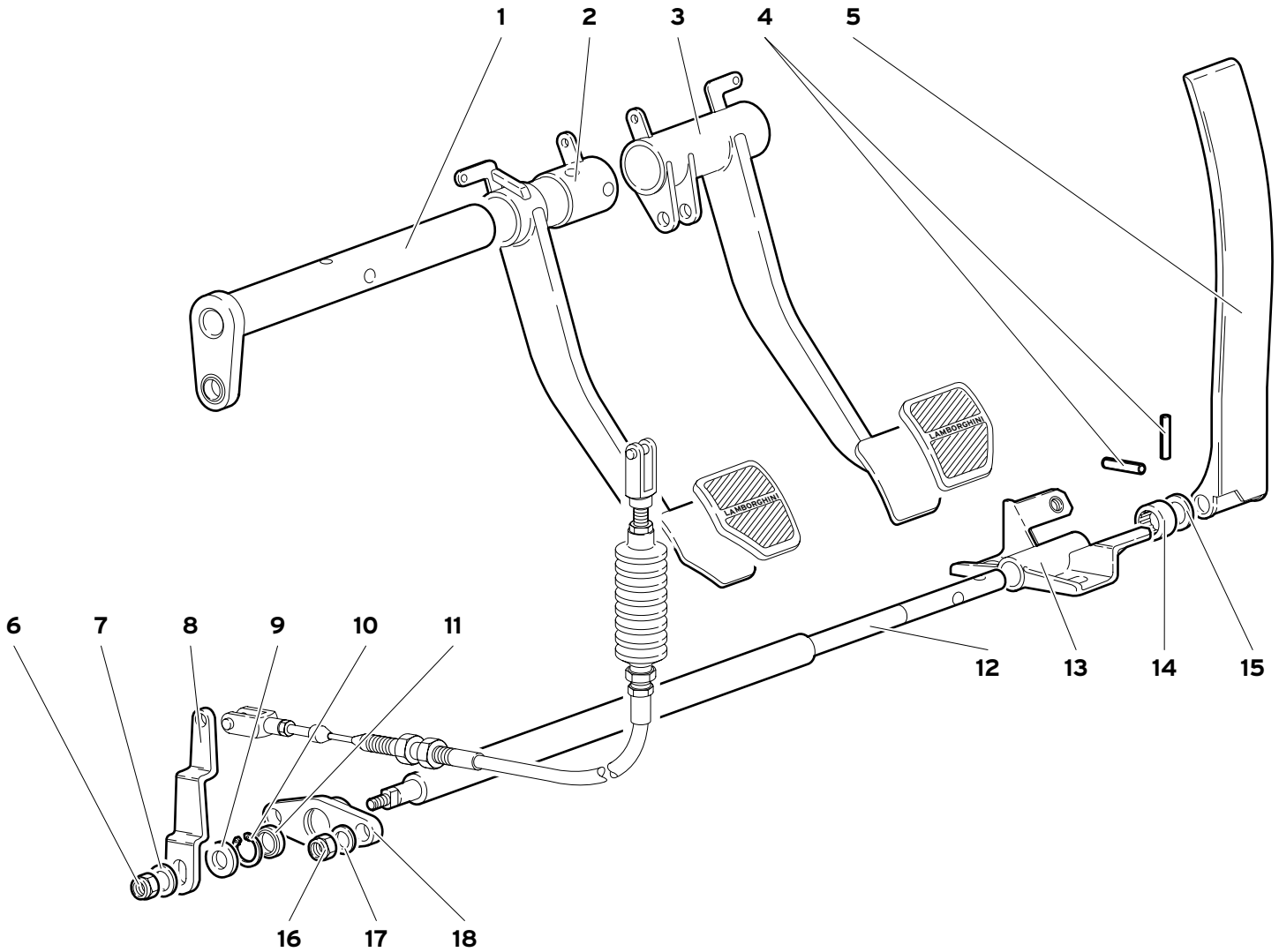

42	MY 99	PEDALIERA (Ver. 74, 76) PEDALS PEDALIER LENKUNG PEDALES	42.01.00	Diablo JV 07/1999

Rif. Ref. Réf. Bez. Ref.	Codice Part number Numero des pièces Teilnummer Codigo	Q.tà Q.ty Q.té Stk. C.dad	Versione Version Version Version Versión	DESCRIZIONE	DESCRIPTION	DESCRIPTION	BESCHREIBUNG	DESCRIPCION
1	004229950	1		ALBERO	SHAFT	ARBRE	WELLE	ARBOL
2	004235589	1		PEDALE FRIZIONE	PEDAL	PEDALE	FUSSHEBEL	PEDAL
3	004232778	1		PEDALE FRENO	PEDAL	PEDALE	FUSSHEBEL	PEDAL
4	008900401	2		SPINA	PIN	GOUPILLE	STIFT	PASADOR
5	004232294	1		PEDALE ACCELERATORE	PEDAL	PEDALE	FUSSHEBEL	PEDAL
6	008200804	1		DADO	NUT	ECROU	MUTTER	TUERCA
7	008400816	1		RONDELLA	WASHER	RONDELLE	SCHEIBE	ARANDELA
8	004238042	1		LEVA	LEVER	LEVIER	HEBEL	PALANCA
9	004232286	1		DISTANZIALE	SPACER	ENTRETOISE	ABSTANDSTUECK	SEPARADOR
10	008572202	1		ANELLO RITEGNO	RETAINER RING	ARRETOIR	HALTERING	RETENEDOR
11	004232299	1		SNODO	JOINT	ARTICULATION	GELENK	ARTICULACION
12	004232298	1		ALBERO	SHAFT	ARBRE	WELLE	ARBOL
13	004232827	1		SUPPORTO	SUPPORT	SUPPORT	LAGER	SOPORTE
14	008521206	1		CUSCINETTO	BEARING	ROULEMENT	LAGER	RODAMIENTO
15	008401215	1		RONDELLA	WASHER	RONDELLE	SCHEIBE	ARANDELA
16	008200612	2		DADO	NUT	ECROU	MUTTER	TUERCA
17	008400606	2		RONDELLA	WASHER	RONDELLE	SCHEIBE	ARANDELA
18	004232257	1		SUPPORTO	SUPPORT	SUPPORT	LAGER	SOPORTE

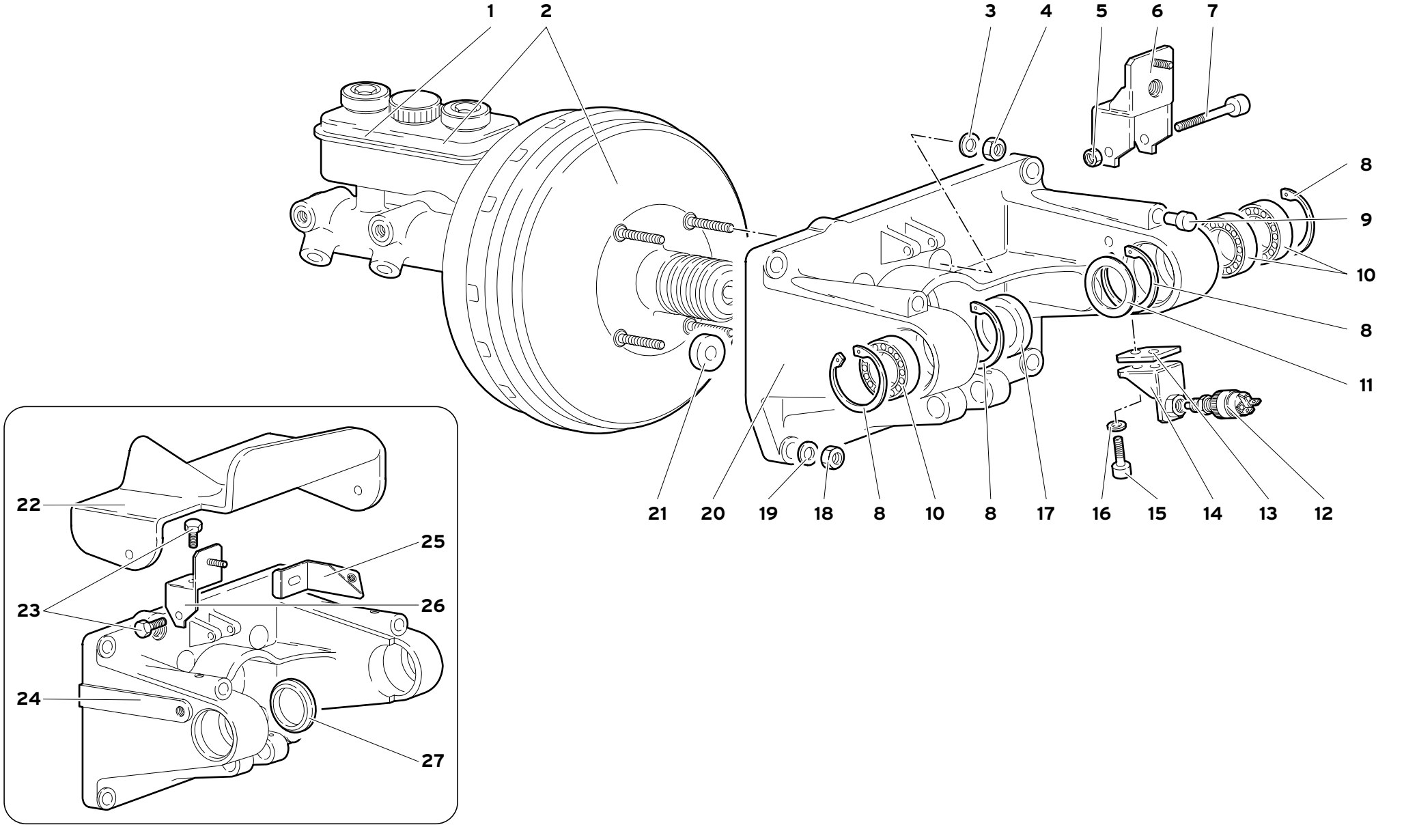

42	MY 99	SUPPORTO PEDALIERA PEDAL MOUNTING SUPPORT PEDALIER PEDALSTEUERUNGSTRÄGER SOPORTE PEDALES	42.02.00	Diablo IV 07/1999

Rif. Ref. Réf. Bez. Ref.	Codice Part number Numero des pièces Teilnummer Codigo	Q.tà Q.ty Q.té Stk. C.dad	Versione Version Version Version Versión	DESCRIZIONE	DESCRIPTION	DESCRIPTION	BESCHREIBUNG	DESCRIPCION
1	004236817	1		SERBATOIO SERVOFRENO	BRAKE-SERVO RESER.	RESERVOIR	BEHAELTER	DEPOSITO
2	0042001085	1		SERVOFRENO	BRAKE-SERVO	SERVO-FREIN	SERVOBREMSE	SERVOFRENO
3	008400801	4		RONDELLA	WASHER	RONDELLE	SCHEIBE	ARANDELA
4	008200804	4		DADO	NUT	ECROU	MUTTER	TUERCA
5	008400606	2		DADO	NUT	ECROU	MUTTER	TUERC
6	004231515	1		SUPPORTO	SUPPORT	SUPPORT	LAGER	SOPORTE
7	008700644	2		VITE	SCREW	VIS	SCHRAUBE	TORNILLO
8	008573701	4		ANELLO RITEGNO	RETAINER RING	ARRETOIR	HALTERING	RETENEDOR
9	004210720	2		ARRESTO	STOP	BUTEE	ANSCHLAG	TOPE
10	008502513	3		CUSCINETTO	BEARING	ROULEMENT	LAGER	RODAMIENTO
11	008402507	1		RONDELLA	WASHER	RONDELLE	SCHEIBE	ARANDELA
12	0042001192	1		INTERRUTTORE ABS	ABS SWITCH	INTERRUPTEUR	SCHALTER	INTERRUPTOR
13	0042001530	1		DISTANZIALE	SPACER	ENTRETOISE	ABSTANDSTUECK	SEPARADOR
14	0042001489	1		SUPPORTO	SUPPORT	SUPPORT	LAGER	SOPORTE
15	008700644	2		VITE	SCREW	VIS	SCHRAUBE	TORNILLO
16	008400606	2		RONDELLA	WASHER	RONDELLE	SCHEIBE	ARANDELA
17	004230923	1		DISTANZIALE	SPACER	ENTRETOISE	ABSTANDSTUECK	SEPARADOR
18	008200804	4		DADO	NUT	ECROU	MUTTER	TUERCA
19	008400801	4		RONDELLA	WASHER	RONDELLE	SCHEIBE	ARANDELA
20	004233483	1		SUPPORTO PEDALIERA	PEDALS SUPPORT	SUPPORT	LAGER	SOPORTE
21	0042000931	4		DISTANZIALE	SPACER	ENTRETOISE	ABSTANDSTUECK	SEPARADOR
22	004332774	1	74	PROTEZIONE	SHIELD	PROTECTION	ABDECKUNG	DEFENSA
22	004332774	1	76	PROTEZIONE	SHIELD	PROTECTION	ABDECKUNG	DEFENSA
23	008700644	2	74	VITE	SCREW	VIS	SCHRAUBE	TORNILLO
23	008700644	2	76	VITE	SCREW	VIS	SCHRAUBE	TORNILLO
24	004233485	1	74	SUPPORTO PEDALIERA	PEDALS SUPPORT	SUPPORT	LAGER	SOPORTE
24	004233485	1	76	SUPPORTO PEDALIERA	PEDALS SUPPORT	SUPPORT	LAGER	SOPORTE
25	004234610	1	74	SUPPORTO	SUPPORT	SUPPORT	LAGER	SOPORTE
25	004234610	1	76	SUPPORTO	SUPPORT	SUPPORT	LAGER	SOPORTE
26	004232996	1	74	PIASTRINA	PLATE	PLAQUETTE	PLAETTCHEN	PLACA
26	004232996	1	76	PIASTRINA	PLATE	PLAQUETTE	PLAETTCHEN	PLACA
27	004232777	1	74	DISTANZIALE	SPACER	ENTRETOISE	ABSTANDSTUECK	SEPARADOR
27	004232777	1	76	DISTANZIALE	SPACER	ENTRETOISE	ABSTANDSTUECK	SEPARADOR

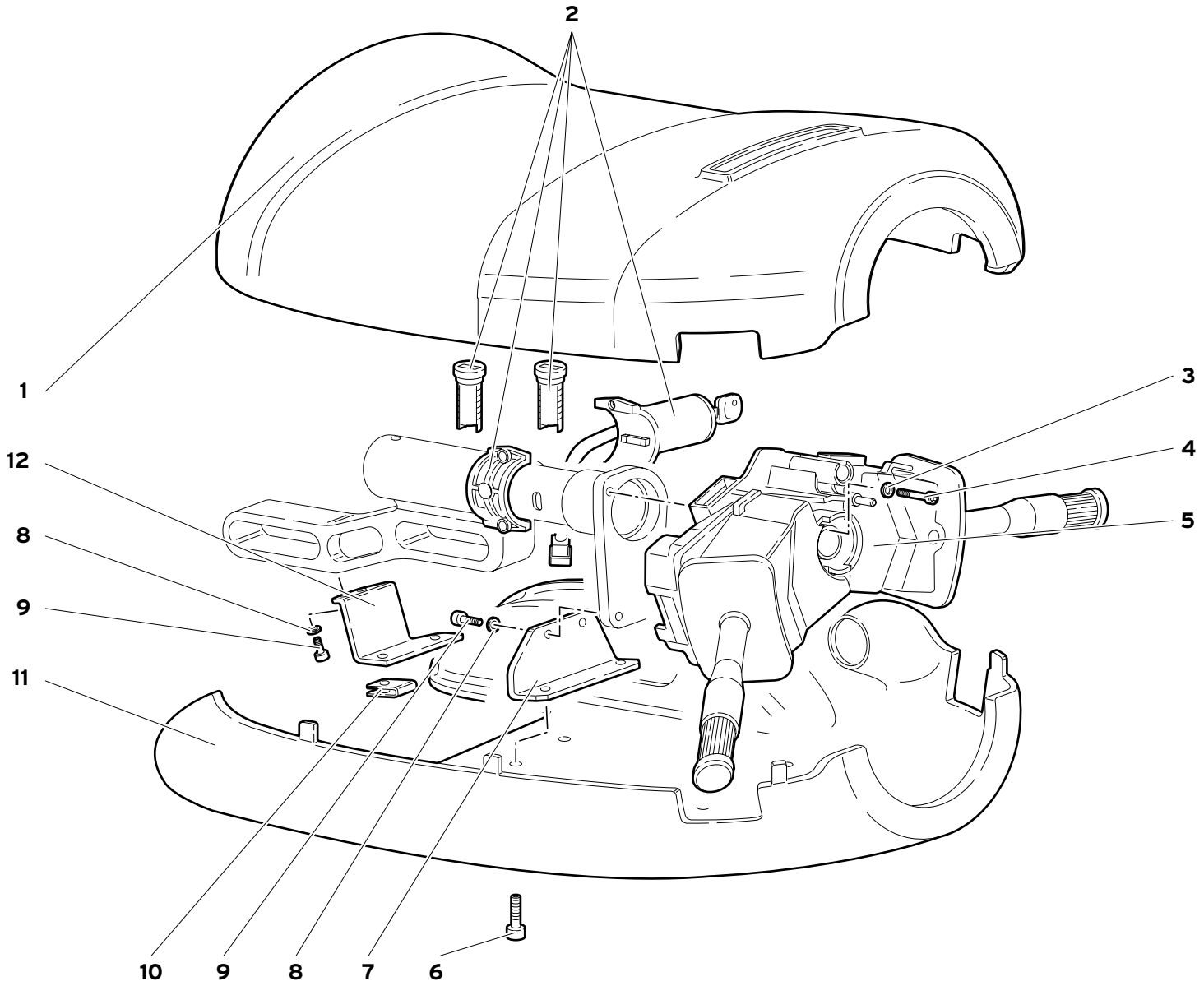
2
1
3
4
12
5
8
9
11
10
9
8
7
6

Rif. Ref. Réf. Bez. Ref.	Codice Part number Numero des pièces Teilnummer Codigo	Q.tà Q.ty Q.té Stk. C.dad	Versione Version Version Version Versión	DESCRIZIONE	DESCRIPTION	DESCRIPTION	BESCHREIBUNG	DESCRIPCION
1	009914311	1		RIVESTIMENTO SUP.	UPPER COVERING	REVETEMENT	VERKLEIDUNG	FORRO
2	006031202	1		KIT COMMUTATORE ACC.	SWITCH	COMMUTATEUR	SCHALTER	CONMUTADOR
3	008400502	2		RONDELLA	WASHER	RONDELLE	SCHEIBE	ARANDELA
4	008700547	2		VITE	SCREW	VIS	SCHRAUBE	TORNILLO
5	004338079	1		DEVIOLUCI	LIGHT CONTR. LEVER	LEVIER	HEBEL	PALANCA
6	008700455	4		VITE	SCREW	VIS	SCHRAUBE	TORNILLO
7	0043001652	1		STAFFA	BRACKET	ETRIER	HALTER	SOPORTE
8	008400506	4		RONDELLA	WASHER	RONDELLE	SCHEIBE	ARANDELA
9	008700512	4		VITE	SCREW	VIS	SCHRAUBE	TORNILLO
10	008220402	4		MOLLETTA	CLIP	AGRAFE	KLEMMSTUECK	SUJETADOR
11	009914312	1		RIVESTIMENTO INF.	LOWER COVERING	REVETEMENT	VERKLEIDUNG	FORRO
12	0043004091	1		STAFFA	BRACKET	ETRIER	HALTER	SOPORTE

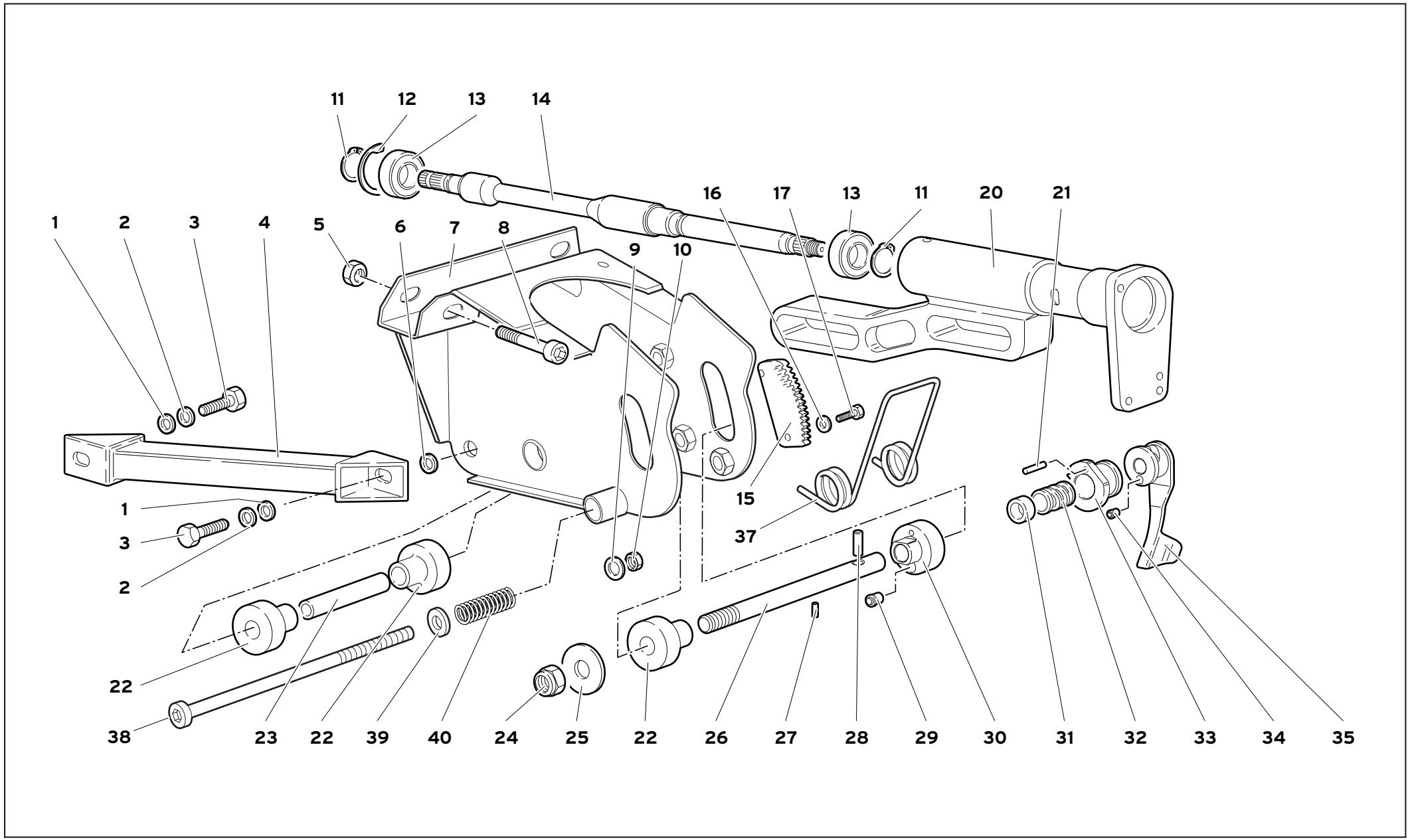

43	MY 99	STERZO STEERING DIRECTION	LENKUNG DIRECCIÓN	43.02.00	Diablo IV 07/1999

Rif. Ref. Réf. Bez. Ref.	Codice Part number Numero des pièces Teilnummer Codigo	Q.tà Q.ty Q.té Stk. C.dad	Versione Version Version Version Versión	DESCRIZIONE	DESCRIPTION	DESCRIPTION	BESCHREIBUNG	DESCRIPCION
1	008400801	2		RONDELLA	WASHER	RONDELLE	SCHEIBE	ARANDELA
2	008410810	2		RONDELLA	WASHER	RONDELLE	SCHEIBE	ARANDELA
3	008100830	2		VITE	SCREW	VIS	SCHRAUBE	TORNILLO
4	004337924	1		PUNTONE	STRUT	ETAI	STREBE	TORNAPUNTA
5	008200824	2		DADO	NUT	ECROU	MUTTER	TUERCA
6	005133170			SPESSORE DI REGISTRO	SHIM	CALE D'EPAISSEUR	DISTANZSCHEIBE	SUPLEMENTO
7	0043004072	1		SUPPORTO	SUPPORT	SUPPORT	LAGER	SOPORTE
7	0043005340	1	74	SUPPORTO	SUPPORT	SUPPORT	LAGER	SOPORTE
7	0043005340	1	76	SUPPORTO	SUPPORT	SUPPORT	LAGER	SOPORTE
8	008700830	2		VITE	SCREW	VIS	SCHRAUBE	TORNILLO
9	008410810	1		RONDELLA	WASHER	RONDELLE	SCHEIBE	ARANDELA
10	008200801	1		DADO	NUT	ECROU	MUTTER	TUERCA
11	008581801	2		ANELLO RITEGNO	RETAINER RING	ARRETOIR	HALTERING	RETENEDOR
12	008573701	1		ANELLO RITEGNO	RETAINER RING	ARRETOIR	HALTERING	RETENEDOR
13	008502011	2		CUSCINETTO	BEARING	ROULEMENT	LAGER	RODAMIENTO
14	0043002199	1		ALBERINO	SMALL SHAFT	ARBRE	WELLE	ARBOL
15	004337941	1		RISCONTRO DENTATO	TOOTHED LOCK STRIK.	PLAQUE SERRURE	TURSCHLOSSPLATTE	PLACA
16	008400502	2		RONDELLA	WASHER	RONDELLE	SCHEIBE	ARANDELA
17	008700522	2		VITE	SCREW	VIS	SCHRAUBE	TORNILLO
18	008502011	1		CUSCINETTO	BEARING	ROULEMENT	LAGER	RODAMIENTO
19	008581801	1		ANELLO RITEGNO	RETAINER RING	ARRETOIR	HALTERING	RETENEDOR
20	0043002200	1		SUPPORTO PIANTONE GUIDA	S. COLUMN SUPPORT	SUPPORT	LAGER	SOPORTE
21	004338318	1		SPINA	PIN	GOUPILLE	STIFT	PASADOR
22	004337939	3		DISTANZIALE	SPACER	ENTRETOISE	ABSTANDSTUECK	SEPARADOR
23	004337944	1		BOCCOLA	BUSHING	DOUILLE	BUECHSE	CASQUILLO
24	008201231	1		DADO	NUT	ECROU	MUTTER	TUERCA
25	005133169	1		RONDELLA	WASHER	RONDELLE	SCHEIBE	ARANDELA
26	004337942	1		PERNO	PIN	AXE	BOLZEN	EJE
27	008900408	1		SPINA	PIN	GOUPILLE	STIFT	PASADOR
28	004338065	1		SPINA	PIN	GOUPILLE	STIFT	PASADOR
29	004338060	1		SFERA DI POSIZIONE	POSITION BALL	BILLE	KUGEL	BOLA
30	004337946	1		DISTANZIALE	SPACER	ENTRETOISE	ABSTANDSTUECK	SEPARADOR
31	004337952	1		RONDELLA	WASHER	RONDELLE	SCHEIBE	ARANDELA
32	004337947	1		MOLLA	SPRING	RESSORT	FEDER	RESORTE
33	004337948	1		BICCHIERE DENTATO	TOOTHED BUCKET	POUSSOIR	BECHER	CUBETA
34	009907111	1		SFERA DI POSIZIONE	POSITION BALL	BILLE	KUGEL	BOLA
35	004338317	1		LEVA	LEVER	LEVIER	HEBEL	PALANCA
36	008100824	1		VITE	SCREW	VIS	SCHRAUBE	TORNILLO
37	0043004084	1		MOLLA	SPRING	RESSORT	FEDER	RESORTE
38	008700694	1		VITE	SCREW	VIS	SCHRAUBE	TORNILLO
39	008400606	1		RONDELLA	WASHER	RONDELLE	SCHEIBE	ARANDELA
40	009414416	1		MOLLA	SPRING	RESSORT	FEDER	RESORTE

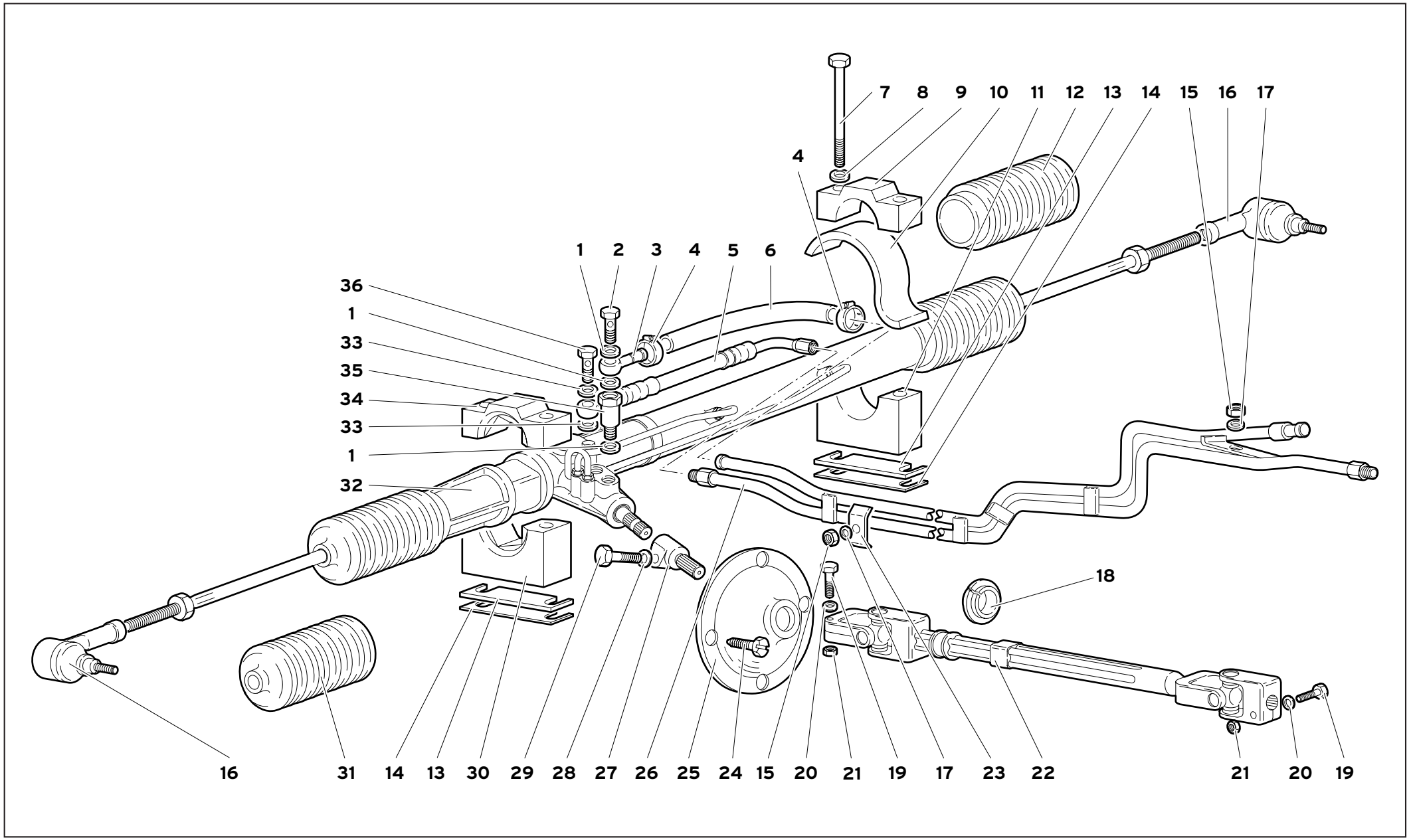
7
8
9
10
11
12
13
14
15
16
17
4
1
2
3
4
5
6
36
1
33
35
34
33
1
32
18
16
31
14
13
30
29
28
27
26
25
24
15
20
21
19
17
23
22
21
20
19

Rif. Ref. Réf. Bez. Ref.	Codice Part number Numero des pièces Teilnummer Codigo	Q.tà Q.ty Q.té Stk. C.dad	Versione Version Version Version Versión	DESCRIZIONE	DESCRIPTION	DESCRIPTION	BESCHREIBUNG	DESCRIPCION
1	008401621	3		RONDELLA	WASHER	RONDELLE	SCHEIBE	ARANDELA
2	003101941	1		VITE FORATA	SCREW	VIS	SCHRAUBE	TORNILLO
3	004033471	1		RACCORDO	CONNECTION	RACCORD	STUTZEN	RACOR
4	008831320	2		FASCETTA	STRAP	COLLIER	HALTEBAND	ABRAZADERA
5	004033464	1		TUBO	PIPE	TUYAU	ROHR	TUBO
6	004033459	1		TUBO	PIPE	TUYAU	ROHR	TUBO
7	008101076	4		VITE	SCREW	VIS	SCHRAUBE	TORNILLO
8	008401007	4		RONDELLA	WASHER	RONDELLE	SCHEIBE	ARANDELA
9	004333518	1		CAVALLOTTO	RETAINER	ARRETOIR	KLEMMSTUECK	SUJETADOR
10	004331587	1		SPESSORE IN GOMMA	FLEX PAD	CALE ELASTIQUE	ELASTICHE UNTER.	SUPLEMENTO ELA.
11	004333655	1		SUPPORTO	SUPPORT	SUPPORT	LAGER	SOPORTE
12	004335023	1		CUFFIA	BOOT	CAPUCHON	MANSCHETTE	CAPUCHON
13	004333658			SPESSORE DI REGISTRO 1 MM	SHIM	CALE D'EPAISSEUR	DISTANZSCHEIBE	SUPLEMENTO
14	004333657			SPESSORE DI REGISTRO 0,5 MM	SHIM	CALE D'EPAISSEUR	DISTANZSCHEIBE	SUPLEMENTO
15	008200503	3		DADO	NUT	ECROU	MUTTER	TUERCA
16	004334555	2		TESTA GIUNTO SFERICO	COUPLING HEAD	JOINT A ROTULE	KUGELPFANNE	ARTICULACION DE
17	008400502	3		RONDELLA	WASHER	RONDELLE	SCHEIBE	ARANDELA
18	0043002396	1		BOCCOLA	BUSHING	DOUILLE	BUECHSE	CASQUILLO
19	008700843	2		VITE	SCREW	VIS	SCHRAUBE	TORNILLO
20	008410823	2		RONDELLA	WASHER	RONDELLE	SCHEIBE	ARANDELA
21	008200809	2		DADO	NUT	ECROU	MUTTER	TUERCA
22	0043002198	1		ALBERO SNODATO	JOINTED SHAFT	ARBRE ARTICULE	GELENKWELLE	ARBOL ARTICULADO
23	004033480	2		PIASTRINA	PLATE	PLAQUETTE	PLAETTCHEN	PLACA
24	008700673	4		VITE	SCREW	VIS	SCHRAUBE	TORNILLO
25	004330272	1		GUARNIZIONE	GASKET	GUARNITURE	DICHTUNG	GUARNIZIONE
26	004038062	1		TUBO	PIPE	TUYAU	ROHR	TUBO
27	004332458	1		CONNESSIONE	CONNECTION	CONNEXION	LEITUNG	CABLE
28	008410820	1		RONDELLA	WASHER	RONDELLE	SCHEIBE	ARANDELA
29	008100831	1		VITE	SCREW	VIS	SCHRAUBE	TORNILLO
30	004333656	1		SUPPORTO	SUPPORT	SUPPORT	LAGER	SOPORTE
31	004335023	1		CUFFIA	BOOT	CAPUCHON	MANSCHETTE	CAPUCHON
32	004333375	1		CREMAGLIERA SERVOASSISTITA	POWER STEERING	CREMAILLERE	ZAHNSTANGE	CREMALLERA
33	008401408	2		RONDELLA	WASHER	RONDELLE	SCHEIBE	ARANDELA
34	004331582	1		CAVALLOTTO	RETAINER	ARRETOIR	KLEMMSTUECK	SUJETADOR
35	004033458	1		RACCORDO	CONNECTION	RACCORD	STUTZEN	RACOR
36	005124347	1		RACCORDO	CONNECTION	RACCORD	STUTZEN	RACOR

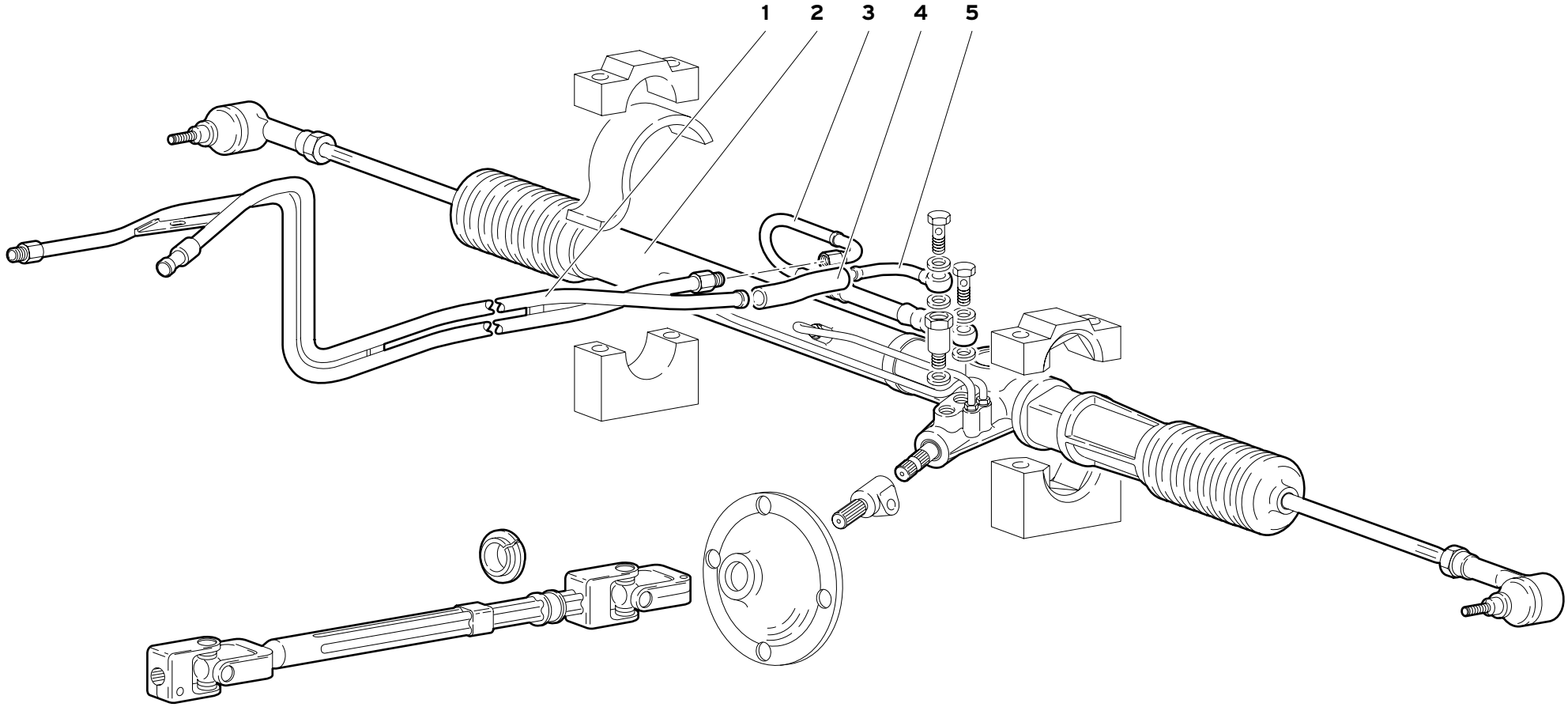
1
2
3
4
5

Rif. Ref. Réf. Bez. Ref.	Codice Part number Numero des pièces Teilnummer Codigo	Q.tà Q.ty Q.té Stk. C.dad	Versione Version Version Version Versión	DESCRIZIONE	DESCRIPTION	DESCRIPTION	BESCHREIBUNG	DESCRIPCION
1	004034605	1		TUBO	PIPE	TUYAU	ROHR	TUBO
2	004334602	1		CREMAGLIERA	POWER STEERING	CREMAILLERE	ZAHNSTANGE	CREMALLERA
3	004034328	1		TUBO	PIPE	TUYAU	ROHR	TUBO
4	004034603	1		TUBO	PIPE	TUYAU	ROHR	TUBO
5	004034604	1		RACCORDO	CONNECTION	RACCORD	STUTZEN	RACOR

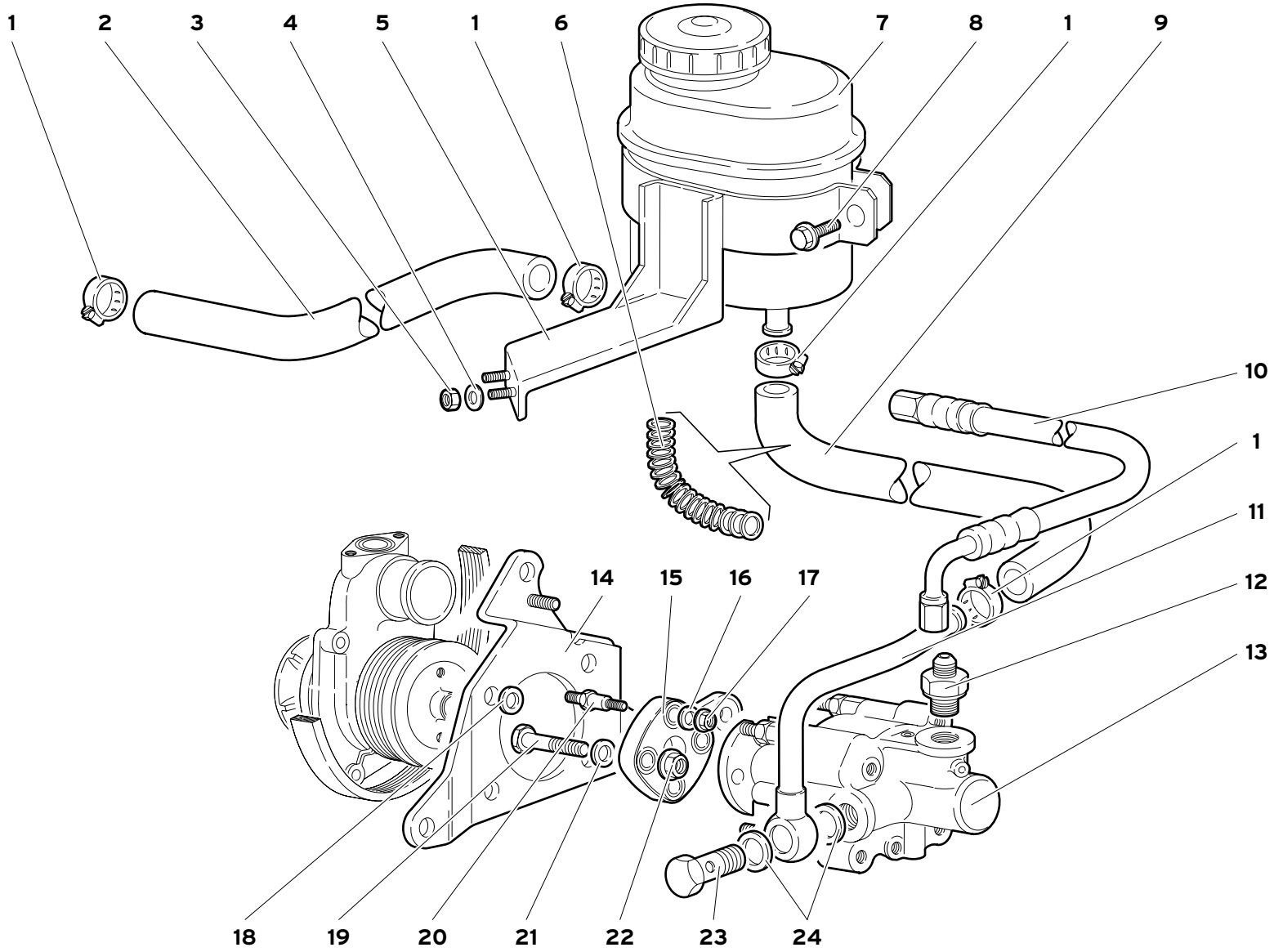
1
2
3
4
5
1
6
7
8
1
9
10
1
11
12
13
14
15
16
17
18
19
20
21
22
23
24

Rif. Ref. Réf. Bez. Ref.	Codice Part number Numero des pièces Teilnummer Codigo	Q.tà Q.ty Q.té Stk. C.dad	Versione Version Version Version Versión	DESCRIZIONE	DESCRIPTION	DESCRIPTION	BESCHREIBUNG	DESCRIPCION
1	008831524	4		FASCETTA	STRAP	COLLIER	HALTEBAND	ABRAZADERA
2	004033461	1		TUBO	PIPE	TUYAU	ROHR	TUBO
3	008200606	2		DADO	NUT	ECROU	MUTTER	TUERCA
4	008400606	2		RONDELLA	WASHER	RONDELLE	SCHEIBE	ARANDELA
5	004034058	1		SUPPORTO	SUPPORT	SUPPORT	LAGER	SOPORTE
6	004034563	1		MOLLA	SPRING	RESSORT	FEDER	RESORTE
7	004033456	1		SERBATOIO OLIO	OIL RESERVOIR	RESERVOIR D'HUILE	OELBEHAELTER	DEPOSITO DE ACEI.
8	008700663	1		VITE	SCREW	VIS	SCHRAUBE	TORNILLO
9	004033457	1		TUBO	PIPE	TUYAU	ROHR	TUBO
10	004033465	1		TUBO	PIPE	TUYAU	ROHR	TUBO
11	004033467	1		RACCORDO	CONNECTION	RACCORD	STUTZEN	RACOR ORIENTABLE
12	004033472	1		RACCORDO	CONNECTION	RACCORD	STUTZEN	RACOR ORIENTABLE
13	004036816	1		POMPA OLIO	OIL PUMP	POMPE A HUILE	OELPUMPE	BOMBA DE ACEITE
14	004037040	1		SUPPORTO	SUPPORT	SUPPORT	LAGER	SOPORTE
15	001737220	1		GIUNTO ELASTICO	FLEXIBLE JOINT	JOINT ELASTIQUE	ELAST.KUPPLUNG	JUNTA ELASTICA
16	008400506	2		RONDELLA	WASHER	RONDELLE	SCHEIBE	ARANDELA
17	008200503	2		DADO	NUT	ECROU	MUTTER	TUERCA
18	008400816	4		RONDELLA	WASHER	RONDELLE	SCHEIBE	ARANDELA
19	004037039	2		VITE	SCREW	VIS	SCHRAUBE	TORNILLO
20	001737044	2		PERNO	PIN	AXE	BOLZEN	EJE
21	008400816	2		RONDELLA	WASHER	RONDELLE	SCHEIBE	ARANDELA
22	008200826	2		DADO	NUT	ECROU	MUTTER	TUERCA
23	004009760	1		VITE FORATA	SCREW	VIS	SCHRAUBE	TORNILLO
24	008401819	2		RONDELLA	WASHER	RONDELLE	SCHEIBE	ARANDELA

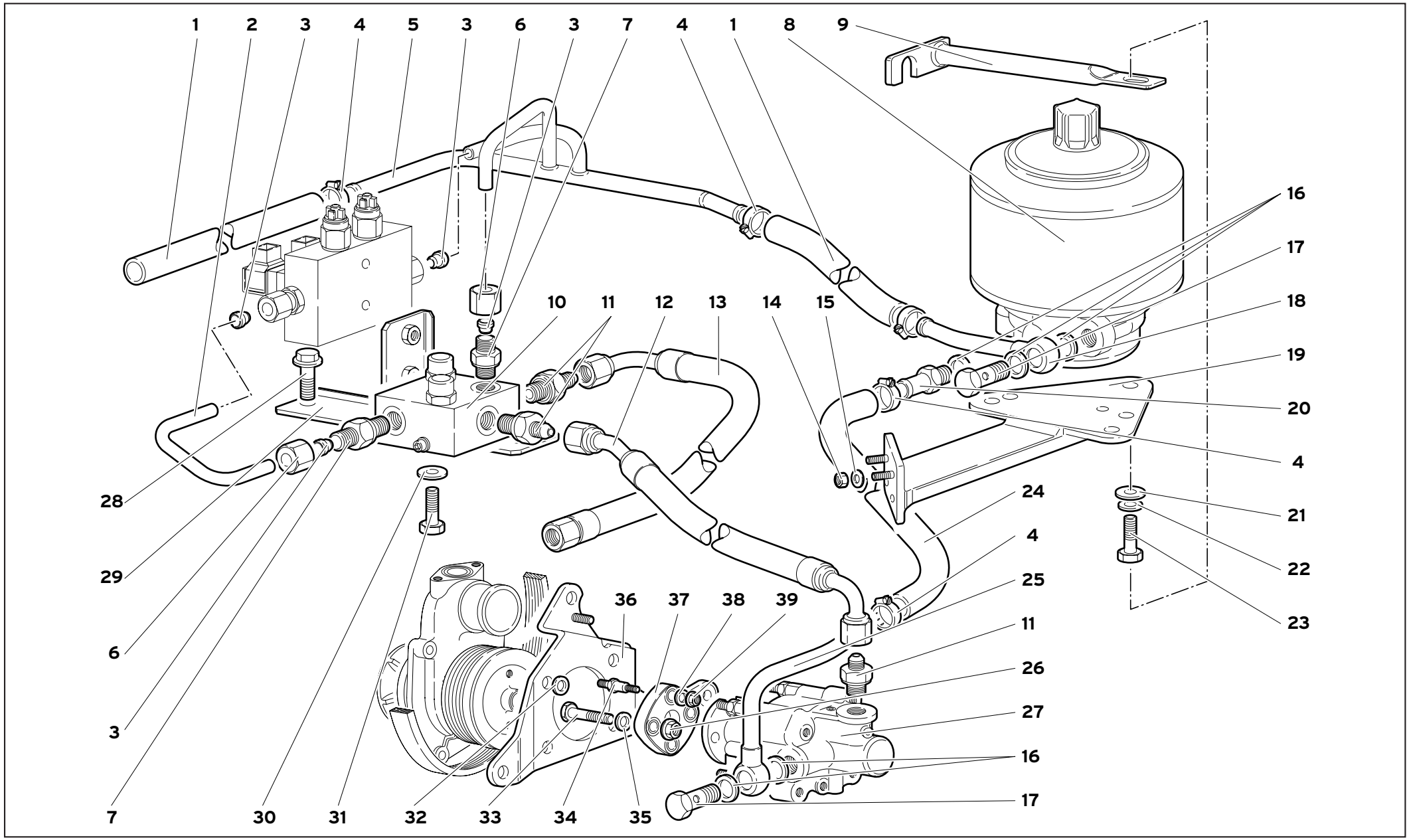
1
2
3
4
5
3
6
3
7
4
1
8
9
16
17
18
19
20
4
21
22
23
10
11
12
13
14
15
24
4
25
11
26
27
16
17
28
29
6
3
7
30
31
32
33
34
35
36
37
38
39

Rif. Ref. Réf. Bez. Ref.	Codice Part number Numero des pièces Teilnummer Codigo	Q.tà Q.ty Q.té Stk. C.dad	Versione Version Version Version Versión	DESCRIZIONE	DESCRIPTION	DESCRIPTION	BESCHREIBUNG	DESCRIPCION
1	004034577	2		TUBO	PIPE	TUYAU	ROHR	TUBO
2	005134578	1		TUBAZIONE RIGIDA	RIGID PIPE	TUYAU	LEITUNG	TUBO
3	004036492	4		BUSSOLA	BUSHING	DOUILLE	GEWINDEBUECHSE	CASQUILLO
4	008831524	6		FASCETTA	STRAP	COLLIER	HALTEBAND	ABRAZADERA
5	005134584	1		TUBAZIONE RIGIDA	RIGID PIPE	TUYAU	LEITUNG	TUBO
6	004036493	2		DADO	NUT	ECROU	MUTTER	TUERCA
7	004036490	2		RACCORDO	CONNECTION	RACCORD	STUTZEN	RACOR
8	004037387	1		SERBATOIO	W/W RESERVOIR	RESERVOIR	BEHAELTER	DEPOSITO
9	004036796	1		STAFFA	BRACKET	ETRIER	HALTER	SOPORTE
10	004034570	1		VALVOLA	VALVE	SOUPAPE	VENTIL	VALVULA
11	004033472	3		RACCORDO	CONNECTION	RACCORD	STUTZEN	RACOR
12	004034576	1		TUBO	PIPE	TUYAU	ROHR	TUBO
13	004034582	1		TUBO	PIPE	TUYAU	ROHR	TUBO
14	008200606	2		DADO	NUT	ECROU	MUTTER	TUERCA
15	008400607	2		RONDELLA	WASHER	RONDELLE	SCHEIBE	ARANDELA
16	008401819	5		RONDELLA	WASHER	RONDELLE	SCHEIBE	ARANDELA
17	004009760	2		VITE FORATA	SCREW	VIS	SCHRAUBE	TORNILLO
18	004036521	1		RACCORDO	CONNECTION	RACCORD	STUTZEN	RACOR
19	004036489	1		SUPPORTO	SUPPORT	SUPPORT	LAGER	SOPORTE
20	004036491	1		RACCORDO	CONNECTION	RACCORD	STUTZEN	RACOR
21	008400801	3		RONDELLA	WASHER	RONDELLE	SCHEIBE	ARANDELA
22	008410819	3		RONDELLA	WASHER	RONDELLE	SCHEIBE	ARANDELA
23	008100812	3		VITE	SCREW	VIS	SCHRAUBE	TORNILLO
24	004033457	1		TUBO	PIPE	TUYAU	ROHR	TUBO
25	004033467	1		RACCORDO	CONNECTION	RACCORD	STUTZEN	RACOR
26	008200826	2		DADO	NUT	ECROU	MUTTER	TUERCA
27	004036816	1		POMPA OLIO	OIL PUMP	POMPE A HUILE	OELPUMPE	BOMBA DE ACEITE
28	008700660	1		VITE	SCREW	VIS	SCHRAUBE	TORNILLO
29	004036494	1		SUPPORTO	SUPPORT	SUPPORT	LAGER	SOPORTE
30	008400607	2		RONDELLA	WASHER	RONDELLE	SCHEIBE	ARANDELA
31	008100613	2		VITE	SCREW	VIS	SCHRAUBE	TORNILLO
32	008400816	4		RONDELLA	WASHER	RONDELLE	SCHEIBE	ARANDELA
33	004037039	2		VITE	SCREW	VIS	SCHRAUBE	TORNILLO
34	001737044	2		PERNO	PIN	AXE	BOLZEN	EJE
35	008400816	2		RONDELLA	WASHER	RONDELLE	SCHEIBE	ARANDELA
36	004037040	1		SUPPORTO	SUPPORT	SUPPORT	LAGER	SOPORTE
				PER VETTURE CON "LIFTING SYSTEM"	FOR VEHICLES WITH "LIFTING SYSTEM"	POUR VOITURES AVEC "LIFTING SYSTEM"	FÜR FAHRZENGE MIT "LIFTING SYSTEM"	PARA VEHÍCULOS CON "LIFTING SYSTEM"

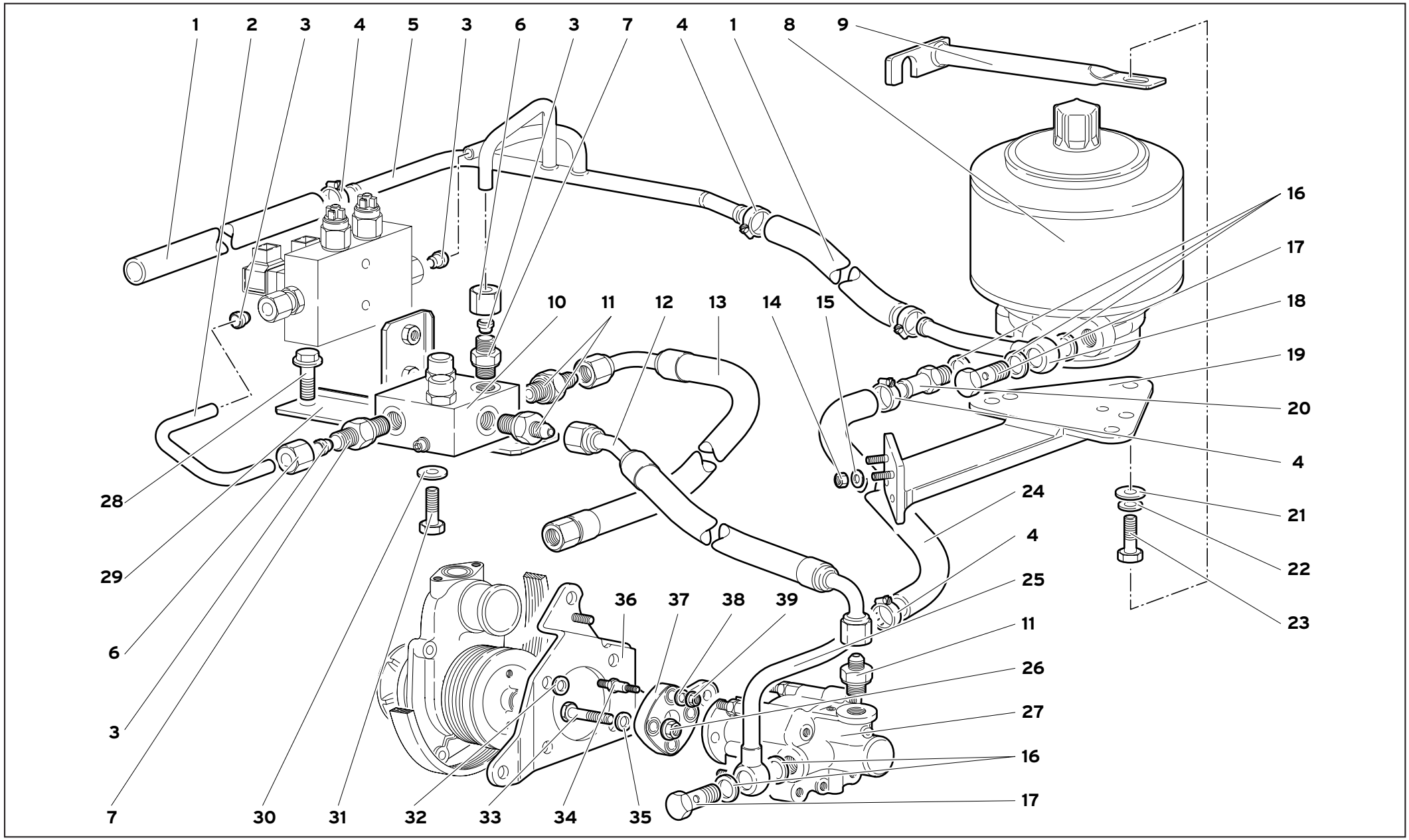
1
2
3
4
5
3
6
3
7
4
1
8
9
16
17
18
19
20
4
21
22
23
10
11
12
13
14
15
24
4
25
11
26
27
16
17
28
29
6
3
7
30
31
32
33
34
35
36
37
38
39

Rif. Ref. Réf. Bez. Ref.	Codice Part number Numero des pièces Teilnummer Codigo	Q.tà Q.ty Q.té Stk. C.dad	Versione Version Version Version Versión	DESCRIZIONE	DESCRIPTION	DESCRIPTION	BESCHREIBUNG	DESCRIPCION
37	001737220	1		GIUNTO ELASTICO	FLEXIBLE JOINT	JOINT ELASTIQUE	ELAST.KUPPLUNG	JUNTA ELASTICA
38	008400506	2		RONDELLA	WASHER	RONDELLE	SCHEIBE	ARANDELA
39	008200503	2		DADO	NUT	ECROU	MUTTER	TUERCA
				PER VETTURE CON "LIFTING SYSTEM"	FOR VEHICLES WITH "LIFTING SYSTEM"	POUR VOITURES AVEC "LIFTING SYSTEM"	FÜR FAHRZENGE MIT "LIFTING SYSTEM"	PARA VEHÍCULOS CON "LIFTING SYSTEM"

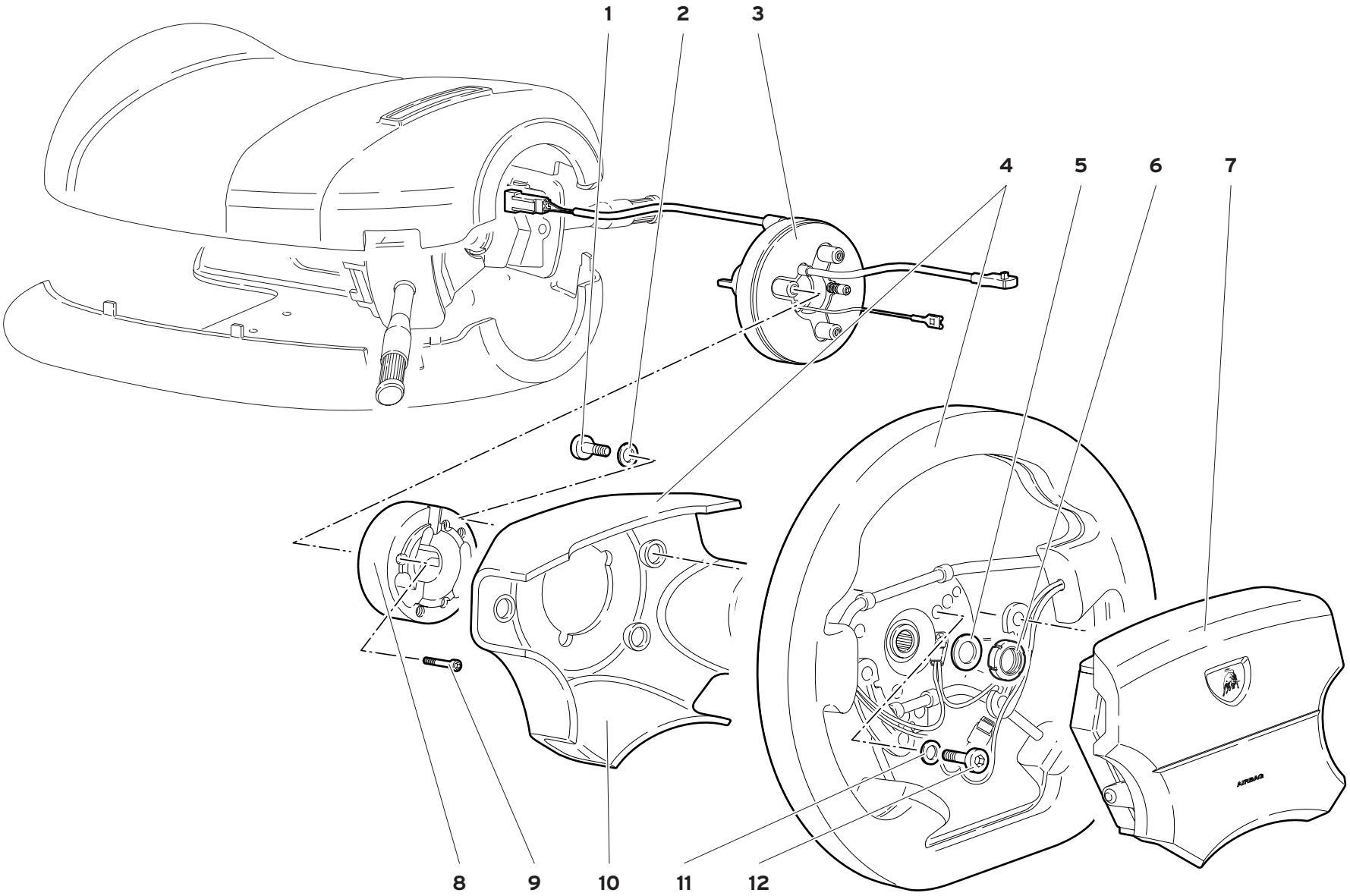
1
2
3
4
5
6
7
8
9
10
11
12
AIRBAG

Rif. Ref. Réf. Bez. Ref.	Codice Part number Numero des pièces Teilnummer Codigo	Q.tà Q.ty Q.té Stk. C.dad	Versione Version Version Version Versión	DESCRIZIONE	DESCRIPTION	DESCRIPTION	BESCHREIBUNG	DESCRIPCION
1	008700644	4		VITE	SCREW	VIS	SCHRAUBE	TORNILLO
2	008410602	4		RONDELLA	WASHER	RONDELLE	SCHEIBE	ARANDELA
3	0043000872	1		CONTATTO SPIRALATO	CONT. (SPIRAL COIL)	CONTACT	KONTAKT	CONTACTO
4	004337913	1		VOLANTE	STEERING WHEEL	VOLANT DE DIREC.	LENKRAD	VOLANTE DE DIREC.
5	008401417	1		RONDELLA	WASHER	RONDELLE	SCHEIBE	ARANDELA
6	008251501	1		GHIERA	PLUG	VIROLE	GEWINDERING	VIROLA
7	004337912	1		MODULO AIRBAG	AIRBAG MODULE	AIRBAG	AIRBAG	AIRBAG
8	004337936	1		DISTANZIALE	SPACER	ENTRETOISE	ABSTANDSTUECK	SEPARADOR
9	008700430	3		VITE	SCREW	VIS	SCHRAUBE	TORNILLO
10	004337914	1		COPERCHIO	COVER	COUVERCLE	DECKEL	TAPA
11	008410820	2		RONDELLA	WASHER	RONDELLE	SCHEIBE	ARANDELA
12	008700847	2		VITE	SCREW	VIS	SCHRAUBE	TORNILLO