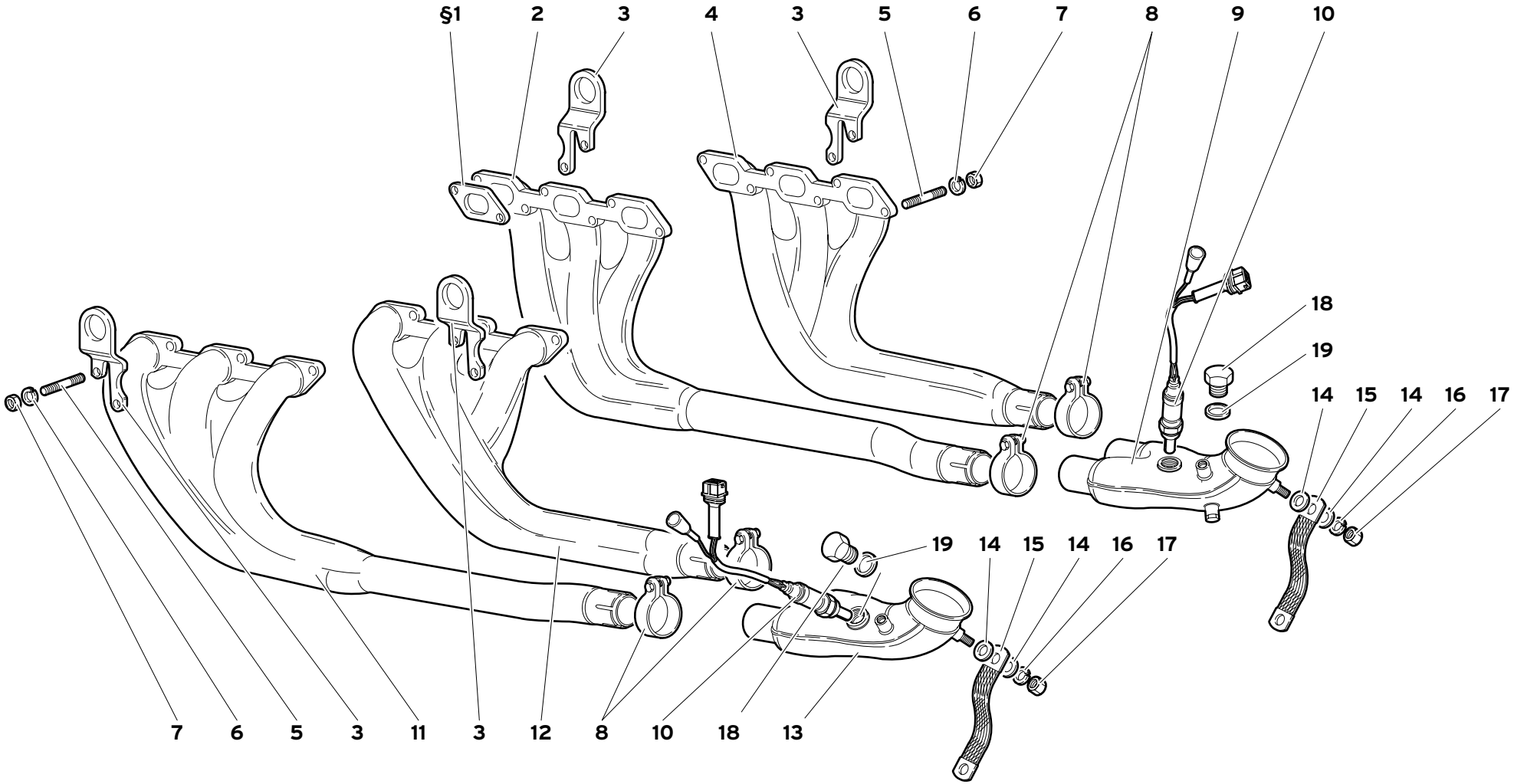


| 44 | MY 99 | IMPIANTO DI SCARICO<br>EXHAUST SYSTEM<br>SYSTEME D'ECHAPPEMENT<br>AUSPUFFANLAGE<br>INSTALACIÓN DE EVACUACIÓN | 44.01.00 | Diablo JV<br>07/1999 |
|---|---|---|---|---|

| Rif.<br>Ref.<br>Réf.<br>Bez.<br>Ref. | Codice<br>Part number<br>Numero des pièces<br>Teilnummer<br>Codigo | Q.tà<br>Q.ty<br>Q.té<br>Stk.<br>C.dad | Versione<br>Version<br>Version<br>Version<br>Versión | DESCRIZIONE | DESCRIPTION | DESCRIPTION | BESCHREIBUNG | DESCRIPCION |
|---|---|---|---|---|---|---|---|---|
| §1 | 001121245 | 12 | | GUARNIZIONE | GASKET | GUARNITURE | DICHTUNG | GUARNIZIONE |
| 2 | 004427530 | 1 | | COLLETTORE ANT. DX | FRONT EXHAUST MAN. | COLLECTEUR D'ECHA. | AUSLASSKRUMMER | COLECTOR DE ESC. |
| 3 | 004432438 | 4 | | GANCIO | HOOK | CROCHET | HAKEN | GANCHO |
| 4 | 004427529 | 1 | | COLLETTORE POST. DX | REAR EXHAUST MAN. | COLLECTEUR D'ECHA. | AUSLASSKRUMMER | COLECTOR DE ESC. |
| 5 | 008300809 | 24 | | PRIGIONIERO | STUD | GOUJON | STIFTSCHRAUBE | ESPARRAGO |
| 6 | 008410817 | 24 | | RONDELLA | WASHER | RONDELLE | SCHEIBE | ARANDELA |
| 7 | 008240808 | 24 | | DADO | NUT | ECROU | MUTTER | TUERCA |
| 8 | 008835002 | 4 | | FASCETTA | STRAP | COLLIER | HALTEBAND | ABRAZADERA |
| 9 | 0044001238 | 1 | | COLLETTORE A TRE VIE DX | EXHAUST MANIFOLD | COLLECTEUR D'ECHA. | AUSLASSKRUMMER | COLECTOR DE ESC. |
| 10 | 004429307 | 2 | | SENSORE DI OSSIGENO | OXIGEN SENSOR | SENSEUR | GEBER | SENSOR |
| 11 | 004427528 | 1 | | COLLETTORE ANT. SX | FRO. L. EXHAUST MAN. | COLLECTEUR D'ECHA. | AUSLASSKRUMMER | COLECTOR DE ESC. |
| 12 | 004427527 | 1 | | COLLETTORE POST. SX | REAR L EXHAUST MAN. | COLLECTEUR D'ECHA. | AUSLASSKRUMMER | COLECTOR DE ESC. |
| 13 | 0044001236 | 1 | | COLLETTORE A TRE VIE SX | EXHAUST MANIFOLD | COLLECTEUR D'ECHA. | AUSLASSKRUMMER | COLECTOR DE ESC. |
| 14 | 008400806 | 4 | | RONDELLA | WASHER | RONDELLE | SCHEIBE | ARANDELA |
| 15 | 001604328 | 2 | | CAVO MASSA | GROUND CABLE | FIL DE MASSEMASSEK | ABEL | CABLE DE MASA |
| 16 | 008410806 | 2 | | RONDELLA | WASHER | RONDELLE | SCHEIBE | ARANDELA |
| 17 | 008200808 | 2 | | DADO | NUT | ECROU | MUTTER | TUERCA |
| 18 | 008931808 | 2 | 80 | TAPPO | PLUG | BOUCHON | STOPFEN | TAPON |
| 18 | 008931808 | 2 | 88 | TAPPO | PLUG | BOUCHON | STOPFEN | TAPON |
| 18 | 008931808 | 2 | 89 | TAPPO | PLUG | BOUCHON | STOPFEN | TAPON |
| 19 | 008401819 | 2 | 80 | RONDELLA | WASHER | RONDELLE | SCHEIBE | ARANDELA |
| 19 | 008401819 | 2 | 88 | RONDELLA | WASHER | RONDELLE | SCHEIBE | ARANDELA |
| 19 | 008401819 | 2 | 89 | RONDELLA | WASHER | RONDELLE | SCHEIBE | ARANDELA |
| §_ _ | | | | PRESENTE ANCHE NEL KIT GUARNIZIONE MOTORE | ALSO INCLUDED IN THE ENGINE GASKET KIT | EST EGALEMENT PRESENTE DANS LE KIT JOINTS DE MOTEUR | AUCH IM KIT MOTORDICHTUNGEN VORHANDEN | INCLUIDO TAMBIÉN EN EL KIT DE GUARNICIONES DEL MOTOR |

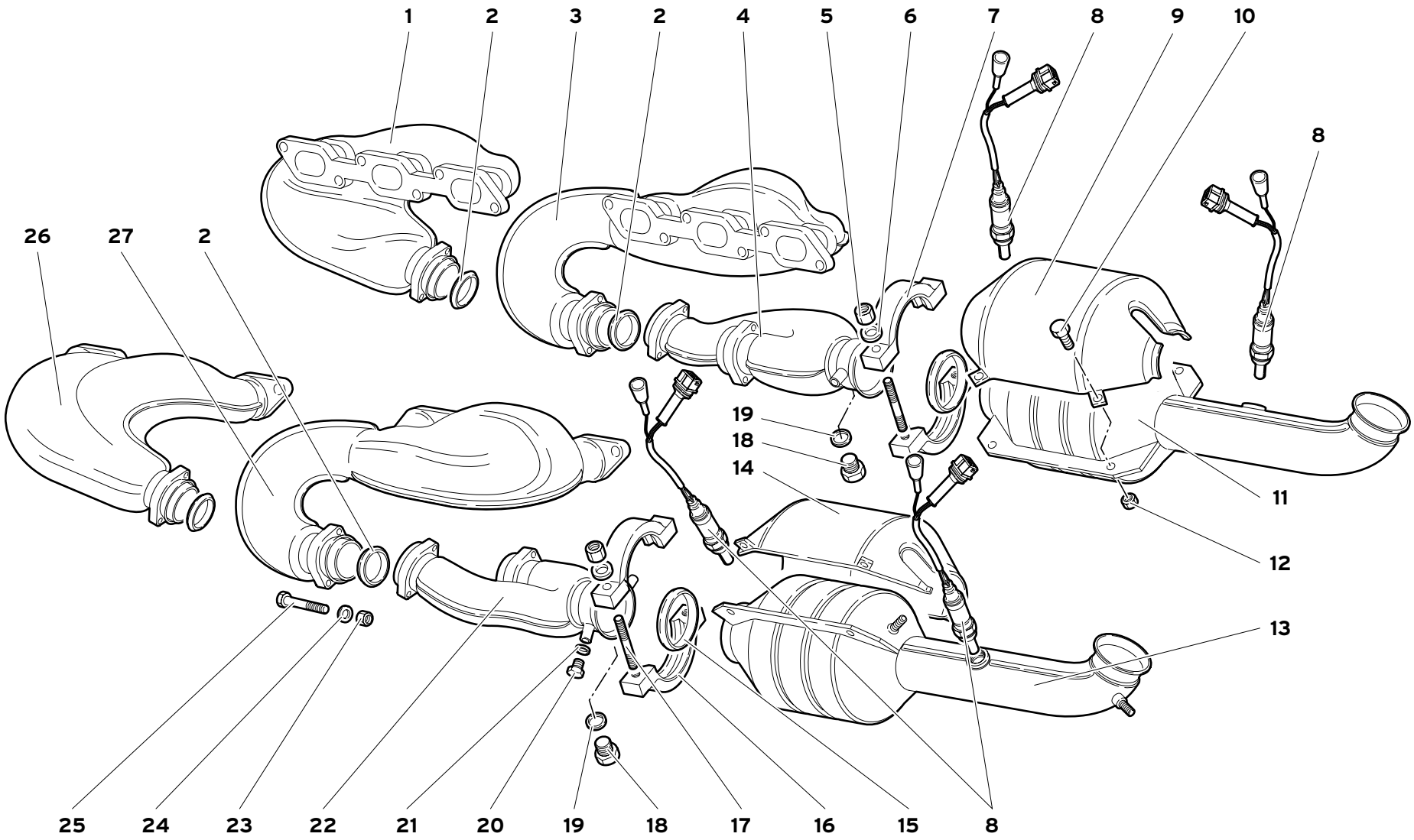


| 44 | MY 99 | IMPIANTO DI SCARICO (Ver. 71, 96)<br>EXHAUST SYSTEM<br>SYSTEME D'ECHAPPEMENT<br>AUSPUFFANLAGE<br>INSTALACIÓN DE EVACUACIÓN | 44.01.01 | Diablo IV<br>02/2000 |
|---|---|---|---|---|

| Rif.<br>Ref.<br>Réf.<br>Bez.<br>Ref. | Codice<br>Part number<br>Numero des pièces<br>Teilnummer<br>Codigo | Q.tà<br>Q.ty<br>Q.té<br>Stk.<br>C.dad | Versione<br>Version<br>Version<br>Version<br>Versión | DESCRIZIONE | DESCRIPTION | DESCRIPTION | BESCHREIBUNG | DESCRIPCION |
|---|---|---|---|---|---|---|---|---|
| 1 | 004435456CB | 1 | | COLLETTORE DI SCARICO ANT. DX | EXHAUST MANIFOLD | COLLECT. D'ECHAP. | AUSLASSKRUMMER | COLECTOR DE ESCA. |
| 2 | 004435972 | 4 | | ANELLO DOPPIO CONO | BI-CONE RING | BI-CONE | DICHTKEGEL | ANILLO BICONICO |
| 3 | 004435457CB | 1 | | COLLETTORE DI SCARICO POST. DX | EXHAUST MANIFOLD | COLLECT. D'ECHAP. | AUSLASSKRUMMER | COLECTOR DE ESCA. |
| 4 | 0044001748 | 1 | | COLLETTORE A TRE VIE DX | EXHAUST MANIFOLD | COLLECT. D'ECHAP. | AUSLASSKRUMMER | COLECTOR DE ESCA. |
| 5 | 008200825 | 4 | | DADO | NUT | ECROU | MUTTER | TUERCA |
| 6 | 008440806 | 4 | | RONDELLA | WASHER | RONDELLE | SCHEIBE | ARANDELA |
| 7 | 004424068 | 2 | | SEMIANELLO | HALF RING | DEMI-BAGUE | RINGHAELFTE | SEMIANILLO |
| 8 | 004429307 | 4 | | SENSORE DI OSSIGENO | OXIGEN SENSOR | SENSEUR | GEBER | SENSOR |
| 9 | 004435463 | 1 | | PROTEZIONE | SHIELD | PROTECTION | ABDECKUNG | DEFENSA |
| 10 | 008700512 | 8 | | VITE | SCREW | VIS | SCHRAUBE | TORNILLO |
| 11 | 0044003569 | 1 | | CONVERTITORE CATALITICO DX | RIGHT CAT. CONVE. | CONVERTISSEUR CAT. | KATALYSATOR | CONVER.CATALITICO |
| 12 | 008200513 | 8 | | DADO | NUT | ECROU | MUTTER | TUERCA |
| 13 | 0044003570 | 1 | | CONVERTITORE CATALITICO SX | LEFT CAT. CONVE. | CONVERTISSEUR CAT. | KATALYSATOR | CONVER.CATALITICO |
| 14 | 004435971 | 1 | | PROTEZIONE | SHIELD | PROTECTION | ABDECKUNG | DEFENSA |
| 15 | 004424070 | 2 | | ANELLO DOPPIO CONO | BI-CONE RING | BI-CONE | DICHTKEGEL | ANILLO BICONICO |
| 16 | 004424067 | 2 | | SEMIANELLO | HALF RING | DEMI-BAGUE | RINGHAELFTE | SEMIANILLO |
| 17 | 008300903 | 4 | | PRIGIONIERO | STUD | GOUJON | STIFTSCHRAUBE | ESPARRAGO |
| 18 | 008931808 | 2 | | TAPPO | PLUG | BOUCHON | STOPFEN | TAPON |
| 19 | 008401819 | 2 | | RONDELLA | WASHER | RONDELLE | SCHEIBE | ARANDELA |
| 20 | 004431148 | 2 | | TAPPO | PLUG | BOUCHON | STOPFEN | TAPON |
| 21 | 008401008 | 2 | | RONDELLA | WASHER | RONDELLE | SCHEIBE | ARANDELA |
| 22 | 0044001747 | 1 | | COLLETTORE A TRE VIE SX | EXHAUST MANIFOLD | COLLECT. D'ECHAP. | AUSLASSKRUMMER | COLECTOR DE ESCA. |
| 23 | 008200825 | 8 | | DADO | NUT | ECROU | MUTTER | TUERCA |
| 24 | 008440806 | 8 | | RONDELLA | WASHER | RONDELLE | SCHEIBE | ARANDELA |
| 25 | 008100870 | 8 | | VITE | SCREW | VIS | SCHRAUBE | TORNILLO |
| 26 | 004435458CB | 1 | | COLLETTORE DI SCARICO ANT. SX | EXHAUST MANIFOLD | COLLECT. D'ECHAP. | AUSLASSKRUMMER | COLECTOR DE ESCA. |
| 27 | 004435459CB | 1 | | COLLETTORE DI SCARICO POST. SX | EXHAUST MANIFOLD | COLLECT. D'ECHAP. | AUSLASSKRUMMER | COLECTOR DE ESCA. |

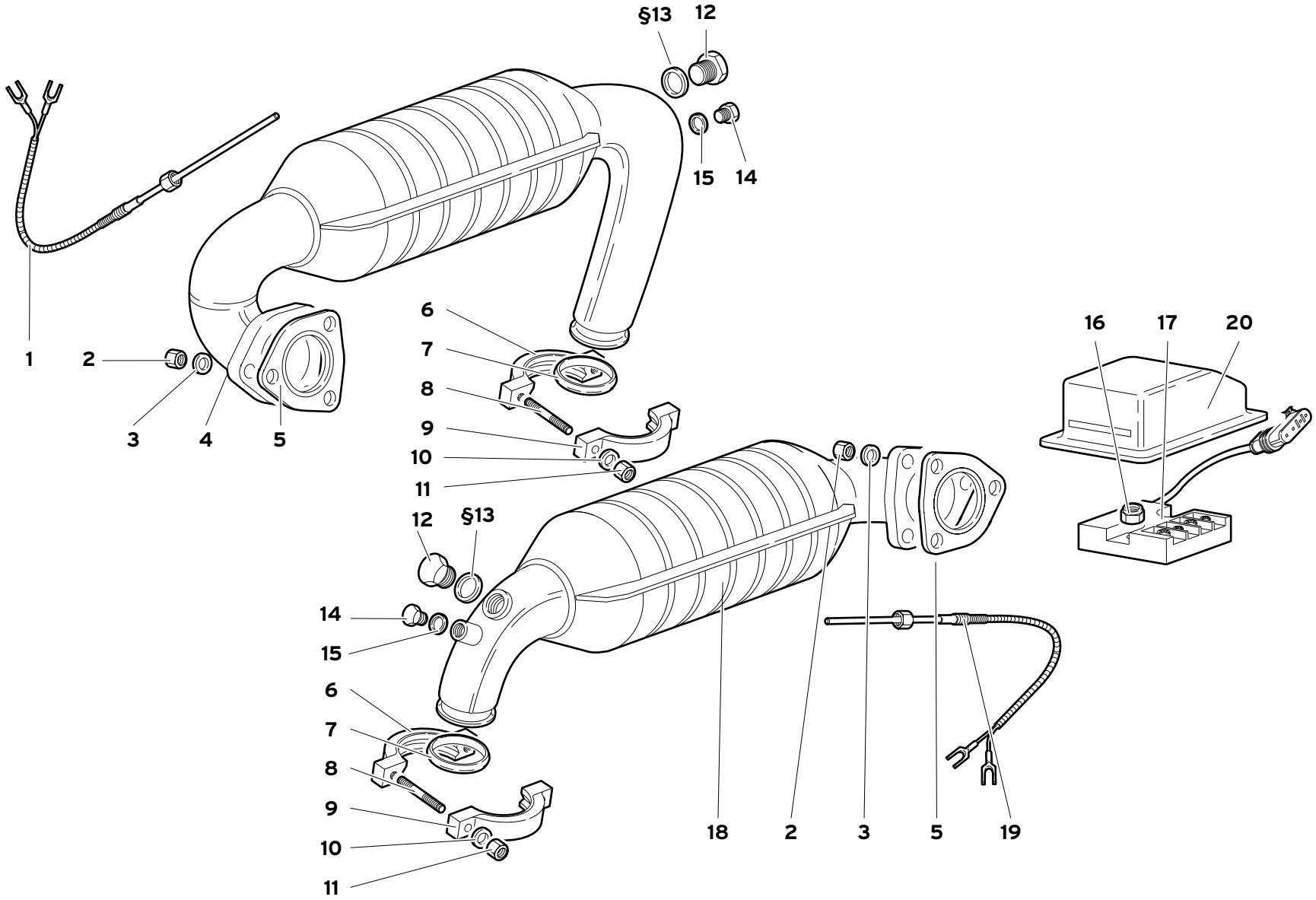
§13
12
15
14
1
2
3
4
5
6
7
8
9
10
11
16
17
20
12
§13
14
15
6
7
8
9
10
11
18
2
3
5
19

| Rif.<br>Ref.<br>Réf.<br>Bez.<br>Ref. | Codice<br>Part number<br>Numero des pièces<br>Teilnummer<br>Codigo | Q.tà<br>Q.ty<br>Q.té<br>Stk.<br>C.dad | Versione<br>Version<br>Version<br>Version<br>Versión | DESCRIZIONE | DESCRIPTION | DESCRIPTION | BESCHREIBUNG | DESCRIPCION |
|---|---|---|---|---|---|---|---|---|
| 1 | 006033686 | 1 | | TERMOCOPPIA (L=1450 MM) | THERMOCOUPLE | THERMOCOUPLE | THERMOELEMENT | PAR TERMICO |
| 2 | 008200825 | 6 | | DADO | NUT | ECROU | MUTTER | TUERCA |
| 3 | 008440806 | 6 | | RONDELLA | WASHER | RONDELLE | SCHEIBE | ARANDELA |
| 4 | 0044003565 | 1 | | ASSIEME CONVERT.CAT. DX | RIGHT CATAL. CON. | CONVERTISSEUR CAT. | KATALYSATOR | CONVER. CATALIT. |
| 5 | 004432145 | 2 | | GUARNIZIONE | GASKET | GUARNITURE | DICHTUNG | GUARNIZIONE |
| 6 | 004424067 | 2 | | SEMIANELLO FILETTATO | HALF RING | DEMI-BAGUE | RINGHAELFTE | SEMIANILLO |
| 7 | 004424070 | 2 | | ANELLO DOPPIO CONO | BI-CONE RING | BI-CONE | DICHTKEGEL | ANILLO BICONICO |
| 8 | 008300903 | 4 | | PRIGIONIERO | STUD | GOUJON | STIFTSCHRAUBE | ESPARRAGO |
| 9 | 004424068 | 2 | | SEMIANELLO | HALF RING | DEMI-BAGUE | RINGHAELFTE | SEMIANILLO |
| 10 | 008440806 | 4 | | RONDELLA | WASHER | RONDELLE | SCHEIBE | ARANDELA |
| 11 | 008200825 | 4 | | DADO | NUT | ECROU | MUTTER | TUERCA |
| 12 | 008931808 | 2 | | TAPPO | PLUG | BOUCHON | STOPFEN | TAPON |
| §13 | 008401819 | 2 | | RONDELLA | WASHER | RONDELLE | SCHEIBE | ARANDELA |
| 14 | 004431148 | 2 | | TAPPO | PLUG | BOUCHON | STOPFEN | TAPON |
| 15 | 008401022 | 2 | | RONDELLA | WASHER | RONDELLE | SCHEIBE | ARANDELA |
| 16 | 008200406 | 2 | | DADO | NUT | ECROU | MUTTER | TUERCA |
| 17 | 006033680 | 1 | | GIUNTO FREDDO CATALYST | COLD JOINT | JOINT FROID | KALTERANSCHLUSS | JUNTA FRÍA |
| 18 | 0044003566 | 1 | | ASSIEME CONVERT. CAT. SX | LEFT CATALYTIC CON. | CONVERTISSEUR CAT. | KATALYSATOR | CONVER. CATALIT. |
| 19 | 006033687 | 1 | | TERMOCOPPIA (L=640 MM) | THERMOCOUPLE | THERMOCOUPLE | THERMOELEMENT | PAR TERMICO |
| 20 | 005934453 | 1 | | PROTEZIONE | SHIELD | PROTECTION | ABDECKUNG | DEFENSA |

§_ _ PRESENTE ANCHE NEL KIT GUARNIZIONE MOTORE | ALSO INCLUDED IN THE ENGINE GASKET KIT | EST EGALEMENT PRESENTE DANS LE KIT JOINTS DE MOTEUR | AUCH IM KIT MOTORDICHTUNGEN VORHANDEN | INCLUIDO TAMBIÉN EN EL KIT DE GUARNICIONES DEL MOTOR

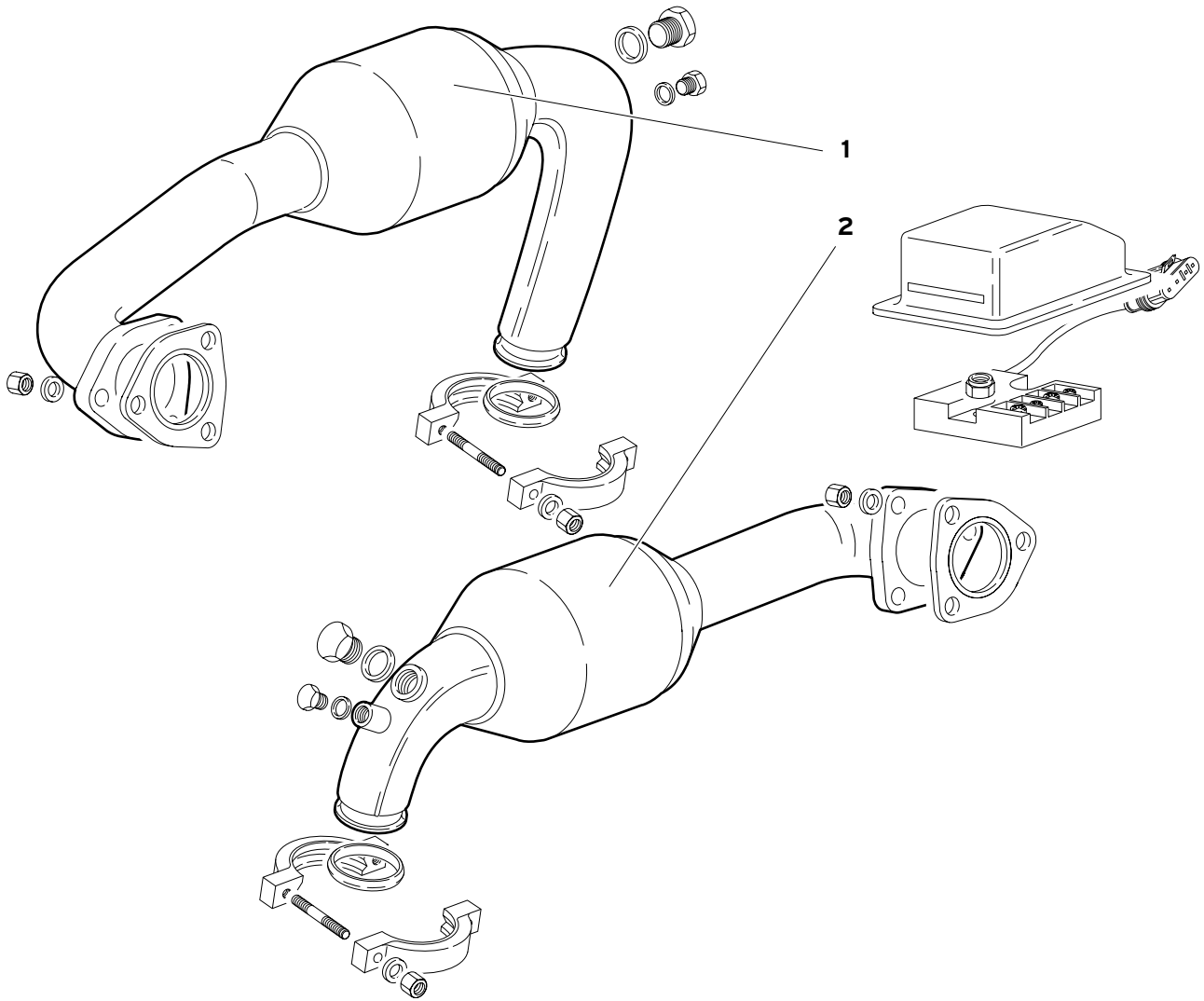
1
2

| Rif.<br>Ref.<br>Réf.<br>Bez.<br>Ref. | Codice<br>Part number<br>Numero des pièces<br>Teilnummer<br>Codigo | Q.tà<br>Q.ty<br>Q.té<br>Stk.<br>C.dad | Versione<br>Version<br>Version<br>Version<br>Versión | DESCRIZIONE | DESCRIPTION | DESCRIPTION | BESCHREIBUNG | DESCRIPCION |
|---|---|---|---|---|---|---|---|---|
| 1 | 0044003567 | 1 | | CONVERT. CATALITICO POST. DX | CATALYTIC CONVER. | CONVERTIS. CATALY. | KATALYSATOR | CONVERTI. CATALITI. |
| 2 | 0044003568 | 1 | | CONVERT. CATALITICO POST. SX | CATALYTIC CONVER. | CONVERTIS. CATALY. | KATALYSATOR | CONVERTI. CATALITI. |

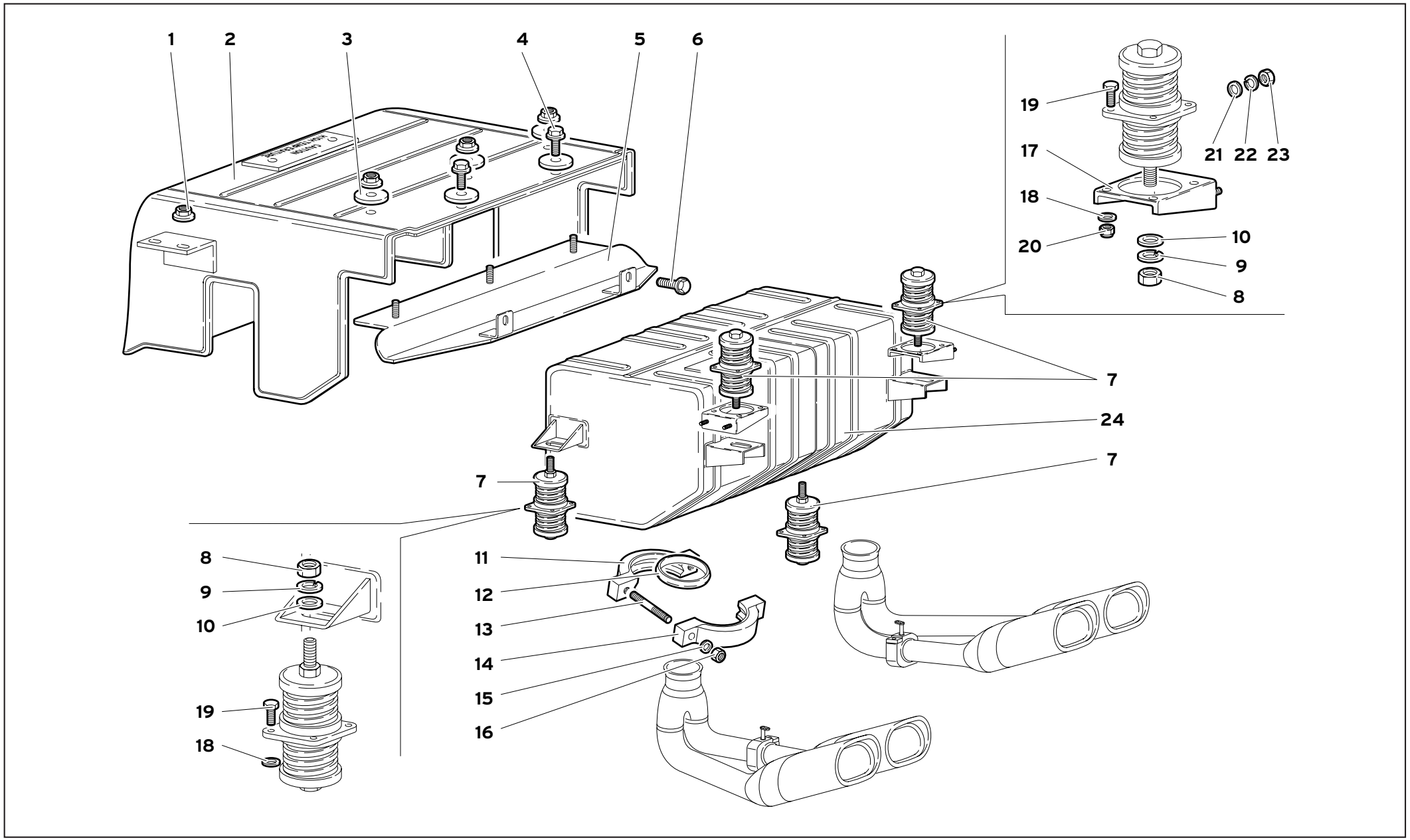


| 44 | MY 99 | IMPIANTO DI SCARICO<br>EXHAUST SYSTEM<br>SYSTEME D'ECHAPPEMENT<br>AUSPUFFANLAGE<br>INSTALACIÓN DE EVACUACIÓN | 44.03.00 | Diablo JV<br>07/1999 |
|---|---|---|---|---|

| Rif.<br>Ref.<br>Réf.<br>Bez.<br>Ref. | Codice<br>Part number<br>Numero des pièces<br>Teilnummer<br>Codigo | Q.tà<br>Q.ty<br>Q.té<br>Stk.<br>C.dad | Versione<br>Version<br>Version<br>Version<br>Versión | DESCRIZIONE | DESCRIPTION | DESCRIPTION | BESCHREIBUNG | DESCRIPCION |
|---|---|---|---|---|---|---|---|---|
| 1 | 008200614 | 7 | | DADO | NUT | ECROU | MUTTER | TUERCA |
| 2 | 004435003 | 1 | | PROTEZIONE | SHIELD | PROTECTION | ABDECKUNG | DEFENSA |
| 3 | 009444151 | 5 | | RONDELLA | WASHER | RONDELLE | SCHEIBE | ARANDELA |
| 4 | 008700660 | 2 | | VITE | SCREW | VIS | SCHRAUBE | TORNILLO |
| 5 | 0044001454 | 1 | | PROTEZIONE | SHIELD | PROTECTION | ABDECKUNG | DEFENSA |
| 6 | 008700449 | 2 | | VITE | SCREW | VIS | SCHRAUBE | TORNILLO |
| 7 | 004432031 | 4 | | AMMORTIZZATORE | SHOCK ABSORBER | AMORTISSEUR | STOSSDAEMPFER | AMORTIGUADOR |
| 8 | 008201001 | 4 | | DADO | NUT | ECROU | MUTTER | TUERCA |
| 9 | 008451005 | 4 | | RONDELLA | WASHER | RONDELLE | SCHEIBE | ARANDELA |
| 10 | 008401006 | 4 | | RONDELLA | WASHER | RONDELLE | SCHEIBE | ARANDELA |
| 11 | 004424067 | 2 | | SEMIANELLO FILETTATO | HALF RING | DEMI-BAGUE | RINGHAELFTE | SEMIANILLO |
| 12 | 004424070 | 2 | | ANELLO DOPPIO CONO | BI-CONE RING | BI-CONE | DICHTKEGEL | ANILLO BICONICO |
| 13 | 008300903 | 4 | | PRIGIONIERO | STUD | GOUJON | STIFTSCHRAUBE | ESPARRAGO |
| 14 | 004424068 | 2 | | SEMIANELLO | HALF RING | DEMI-BAGUE | RINGHAELFTE | SEMIANILLO |
| 15 | 008440806 | 4 | | RONDELLA | WASHER | RONDELLE | SCHEIBE | ARANDELA |
| 16 | 008200825 | 4 | | DADO | NUT | ECROU | MUTTER | TUERCA |
| 17 | 004437428 | 2 | | SUPPORTO | SUPPORT | SUPPORT | LAGER | SOPORTE |
| 18 | 008410508 | 16 | | RONDELLA | WASHER | RONDELLE | SCHEIBE | ARANDELA |
| 19 | 008100504 | 16 | | VITE | SCREW | VIS | SCHRAUBE | TORNILLO |
| 20 | 008200503 | 16 | | DADO | NUT | ECROU | MUTTER | TUERCA |
| 21 | 008400801 | 4 | | RONDELLA | WASHER | RONDELLE | SCHEIBE | ARANDELA |
| 22 | 008410806 | 4 | | RONDELLA | WASHER | RONDELLE | SCHEIBE | ARANDELA |
| 23 | 008200808 | 4 | | DADO | NUT | ECROU | MUTTER | TUERCA |
| 24 | 004430979 | 1 | | SILENZIATORE | SILENCER | SILENCIEUX | AUSPUFFTOPF | SILENCIADOR |
| 24 | 004432231 | 1 | 95 | SILENZIATORE | SILENCER | SILENCIEUX | AUSPUFFTOPF | SILENCIADOR |

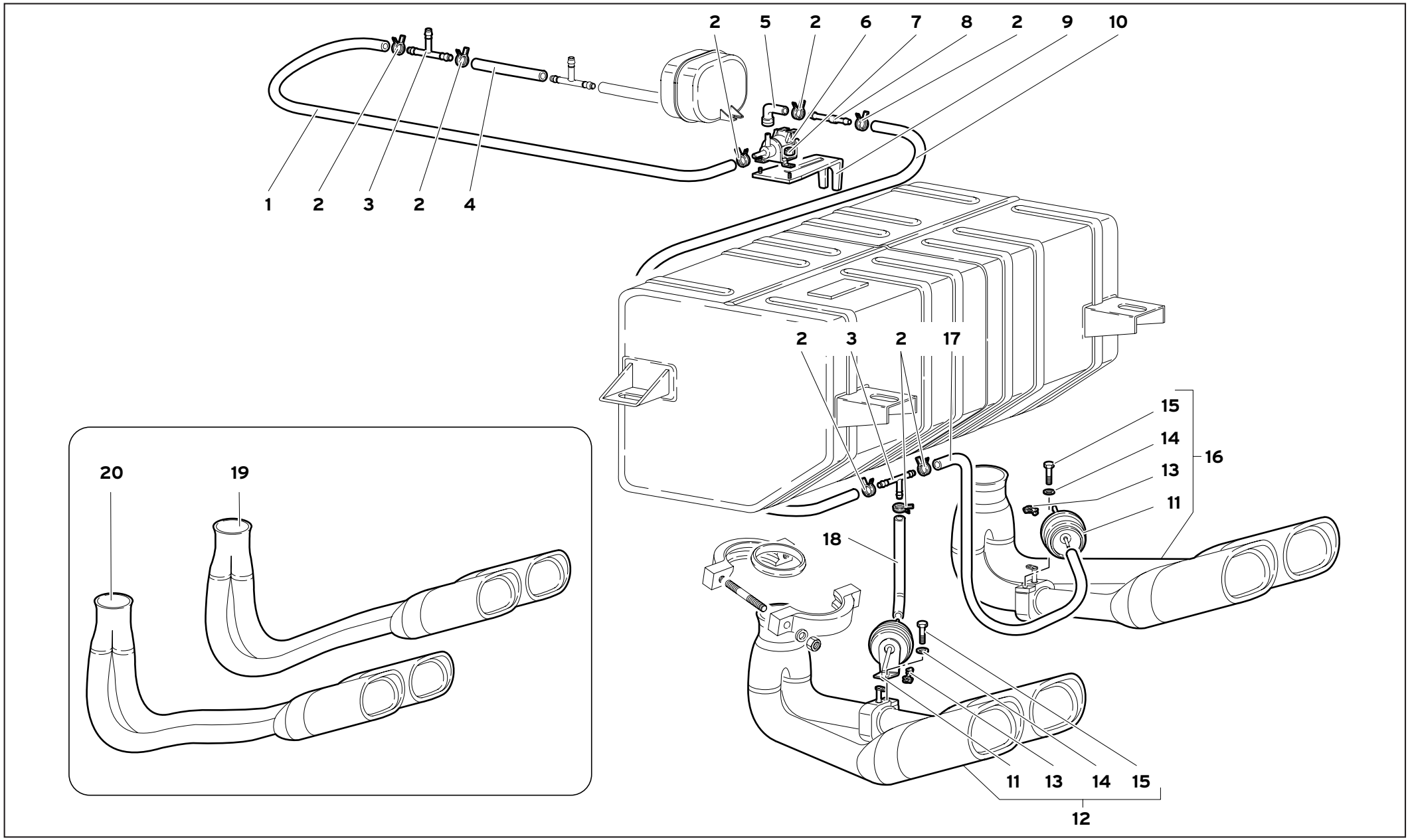


| 44 | MY 99 | IMPIANTO DI SCARICO<br>EXHAUST SYSTEM<br>SYSTEME D'ECHAPPEMENT<br>AUSPUFFANLAGE<br>INSTALACIÓN DE EVACUACIÓN | 44.04.00 | Diablo IV<br>07/1999 |
|---|---|---|---|---|

| Rif.<br>Ref.<br>Réf.<br>Bez.<br>Ref. | Codice<br>Part number<br>Numero des pièces<br>Teilnummer<br>Codigo | Q.tà<br>Q.ty<br>Q.té<br>Stk.<br>C.dad | Versione<br>Version<br>Version<br>Version<br>Versión | DESCRIZIONE | DESCRIPTION | DESCRIPTION | BESCHREIBUNG | DESCRIPCION |
|---|---|---|---|---|---|---|---|---|
| 1 | 004437810 | 1 | | TUBO FLESSIBILE | FLEX. HOSE | TUYAU FLEXIBLE | SCHLAUCH | MANGA FLEXIBLE |
| 2 | 008830128 | 8 | | FASCETTA | STRAP | COLLIER | HALTEBAND | ABRAZADERA |
| 3 | 007014169 | 2 | | RACCORDO TRE VIE | CONNECTION | RACCORD | STUTZEN | RACOR |
| 4 | 004437808 | 1 | | TUBO FLESSIBILE | FLEX. HOSE | TUYAU FLEXIBLE | SCHLAUCH | MANGA FLEXIBLE |
| 5 | 001329321 | 1 | | RACCORDO | CONNECTION | RACCORD | STUTZEN | RACOR |
| 6 | 004627300 | 1 | | ELETTROVALVOLA | ELECTRO-VALVE | SOUPAPE ELECTRIQ. | STEUERVENTIL | ELECTROVALVULA |
| 7 | 008200406 | 2 | | DADO | NUT | ECROU | MUTTER | TUERCA |
| 8 | 001329319 | 1 | | RACCORDO | CONNECTION | RACCORD | STUTZEN | RACOR |
| 9 | 001336194 | 1 | | SUPPORTO | SUPPORT | SUPPORT | LAGER | SOPORTE |
| 10 | 004437810 | 1 | | TUBO FLESSIBILE | FLEX. HOSE | TUYAU FLEXIBLE | SCHLAUCH | MANGA FLEXIBLE |
| 11 | 001336037 | 2 | | ATTUATORE | CONTROL | COMMANDE | BETAETIGUNGS- | MANDO |
| 12 | 0044003944 | 1 | | TERMINALE SX | LEFT TERMINAL | BORNE | KABELSCHUH | TERMINAL |
| 13 | 001337177 | 2 | | FERMAGLIO | CLIP | AGRAFE | KLEMMSTUECK | SUJETADOR |
| 14 | 008400606 | 2 | | RONDELLA | WASHER | RONDELLE | SCHEIBE | ARANDELA |
| 15 | 008100616 | 2 | | VITE | SCREW | VIS | SCHRAUBE | TORNILLO |
| 16 | 0044003945 | 1 | | TERMINALE DX | RIGHT TERMINAL | BORNE | KABELSCHUH | TERMINAL |
| 17 | 004437811 | 1 | | TUBO FLESSIBILE | FLEX. HOSE | TUYAU FLEXIBLE | SCHLAUCH | MANGA FLEXIBLE |
| 18 | 004438267 | 1 | | TUBO FLESSIBILE | FLEX. HOSE | TUYAU FLEXIBLE | SCHLAUCH | MANGA FLEXIBLE |
| 19 | 0044003943 | 1 | 71 | TERMINALE DX | RIGHT TERMINAL | BORNE | KABELSCHUH | TERMINAL |
| 19 | 0044003943 | 1 | 80 | TERMINALE DX | RIGHT TERMINAL | BORNE | KABELSCHUH | TERMINAL |
| 19 | 0044003943 | 1 | 96 | TERMINALE DX | RIGHT TERMINAL | BORNE | KABELSCHUH | TERMINAL |
| 20 | 0044003942 | 1 | 71 | TERMINALE SX | RIGHT TERMINAL | BORNE | KABELSCHUH | TERMINAL |
| 20 | 0044003942 | 1 | 80 | TERMINALE SX | RIGHT TERMINAL | BORNE | KABELSCHUH | TERMINAL |
| 20 | 0044003942 | 1 | 96 | TERMINALE SX | RIGHT TERMINAL | BORNE | KABELSCHUH | TERMINAL |

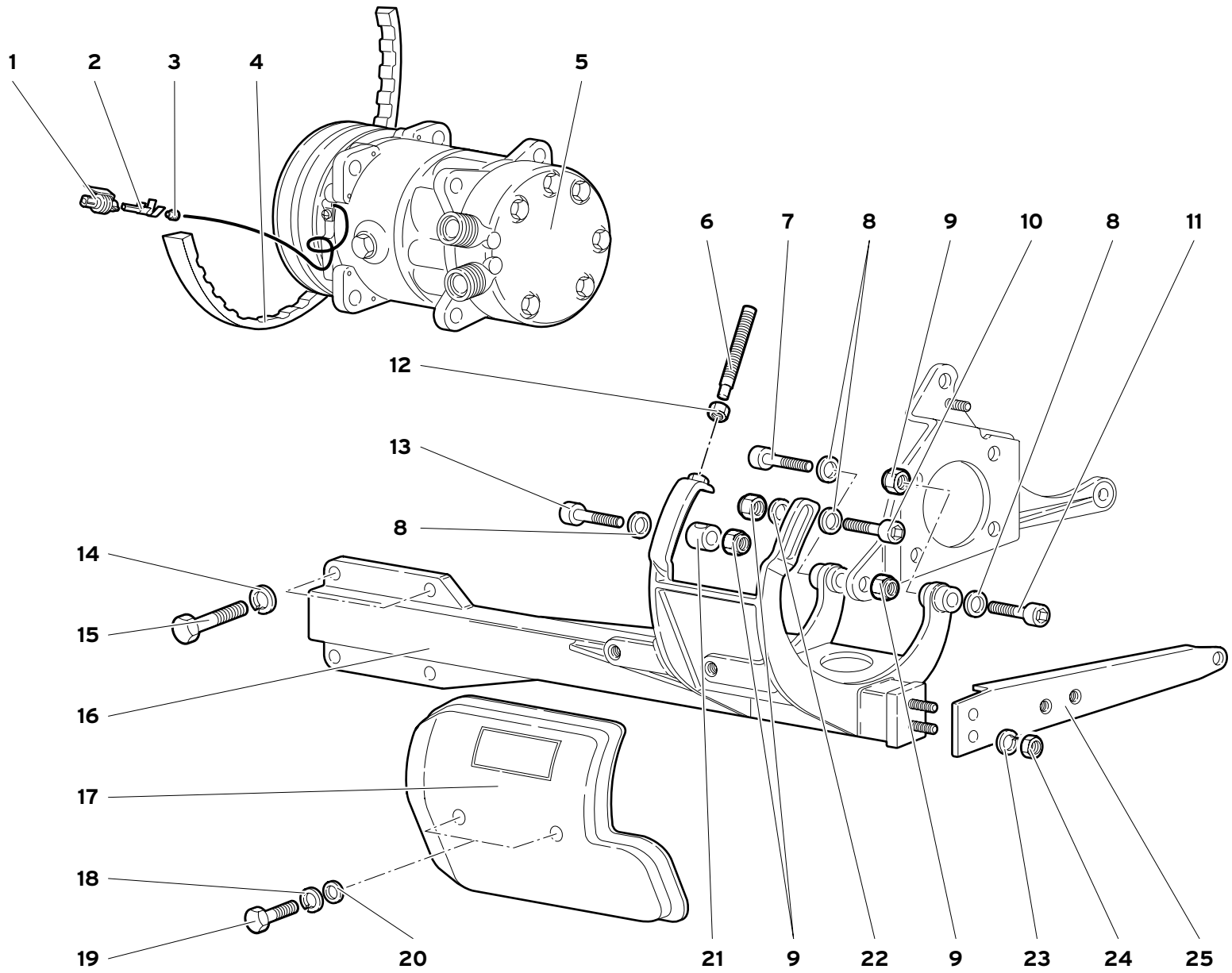


| 45 | MY 99 | IMPIANTO DI CLIMATIZZAZIONE<br>CLIMATE CONTROL<br>SYSTEME DE CLIMATISATION<br>KLIMAANLAGE<br>SISTEMA DE CLIMATIZACIÓN | 45.01.00 | Diablo IV<br>07/1999 |
|---|---|---|---|---|

| Rif.<br>Ref.<br>Réf.<br>Bez.<br>Ref. | Codice<br>Part number<br>Numero des pièces<br>Teilnummer<br>Codigo | Q.tà<br>Q.ty<br>Q.té<br>Stk.<br>C.dad | Versione<br>Version<br>Version<br>Version<br>Versión | DESCRIZIONE | DESCRIPTION | DESCRIPTION | BESCHREIBUNG | DESCRIPCION |
|---|---|---|---|---|---|---|---|---|
| 1 | 006136453 | 1 | | CONNESSIONE | CONNECTION | CONNEXION | LEITUNG | CABLE |
| 2 | 006136454 | 1 | | LINGUETTA | KEY | LINGUET | SCHEIBENFEDER | CHAVETA |
| 3 | 006136447 | 1 | | GOMMA | RUBBER | CAUTCHOUC | GUMMI | CAUCHO |
| 4 | 004534071 | 1 | | CINGHIA | BELT | COURROIE | RIEMEN | CORREA |
| 5 | 004535409 | 1 | | COMPRESSORE | AIR COMPRESSOR | COMPRESSEUR D'AIR | LUFTPRESSER | COMPRESOR |
| 6 | 008700841 | 1 | | VITE | SCREW | VIS | SCHRAUBE | TORNILLO |
| 7 | 008701008 | 1 | | VITE | SCREW | VIS | SCHRAUBE | TORNILLO |
| 8 | 008411002 | 4 | | RONDELLA | WASHER | RONDELLE | SCHEIBE | ARANDELA |
| 9 | 008201008 | 4 | | DADO | NUT | ECROU | MUTTER | TUERCA |
| 10 | 008701017 | 1 | | VITE | SCREW | VIS | SCHRAUBE | TORNILLO |
| 11 | 008701014 | 1 | | VITE | SCREW | VIS | SCHRAUBE | TORNILLO |
| 12 | 008200801 | 1 | | DADO | NUT | ECROU | MUTTER | TUERCA |
| 13 | 008701020 | 1 | | VITE | SCREW | VIS | SCHRAUBE | TORNILLO |
| 14 | 008410810 | 4 | | RONDELLA | WASHER | RONDELLE | SCHEIBE | ARANDELA |
| 15 | 008100830 | 4 | | VITE | SCREW | VIS | SCHRAUBE | TORNILLO |
| 16 | 004535242 | 1 | | SUPPORTO | SUPPORT | SUPPORT | LAGER | SOPORTE |
| 17 | 004535934 | 1 | | PROTEZIONE | SHIELD | PROTECTION | ABDECKUNG | DEFENSA |
| 18 | 008410602 | 2 | | RONDELLA | WASHER | RONDELLE | SCHEIBE | ARANDELA |
| 19 | 008100601 | 2 | | VITE | SCREW | VIS | SCHRAUBE | TORNILLO |
| 20 | 008400606 | 2 | | RONDELLA | WASHER | RONDELLE | SCHEIBE | ARANDELA |
| 21 | 004529646 | 1 | | DISTANZIALE | SPACER | ENTRETOISE | ABSTANDSTUECK | SEPARADOR |
| 22 | 008401028 | 1 | | RONDELLA | WASHER | RONDELLE | SCHEIBE | ARANDELA |
| 23 | 008410810 | 2 | | RONDELLA | WASHER | RONDELLE | SCHEIBE | ARANDELA |
| 24 | 008200801 | 2 | | DADO | NUT | ECROU | MUTTER | TUERCA |
| 25 | 004529645 | 1 | | TIRANTE | TIE ROD | TIRANT | STANGE | VARILLA |

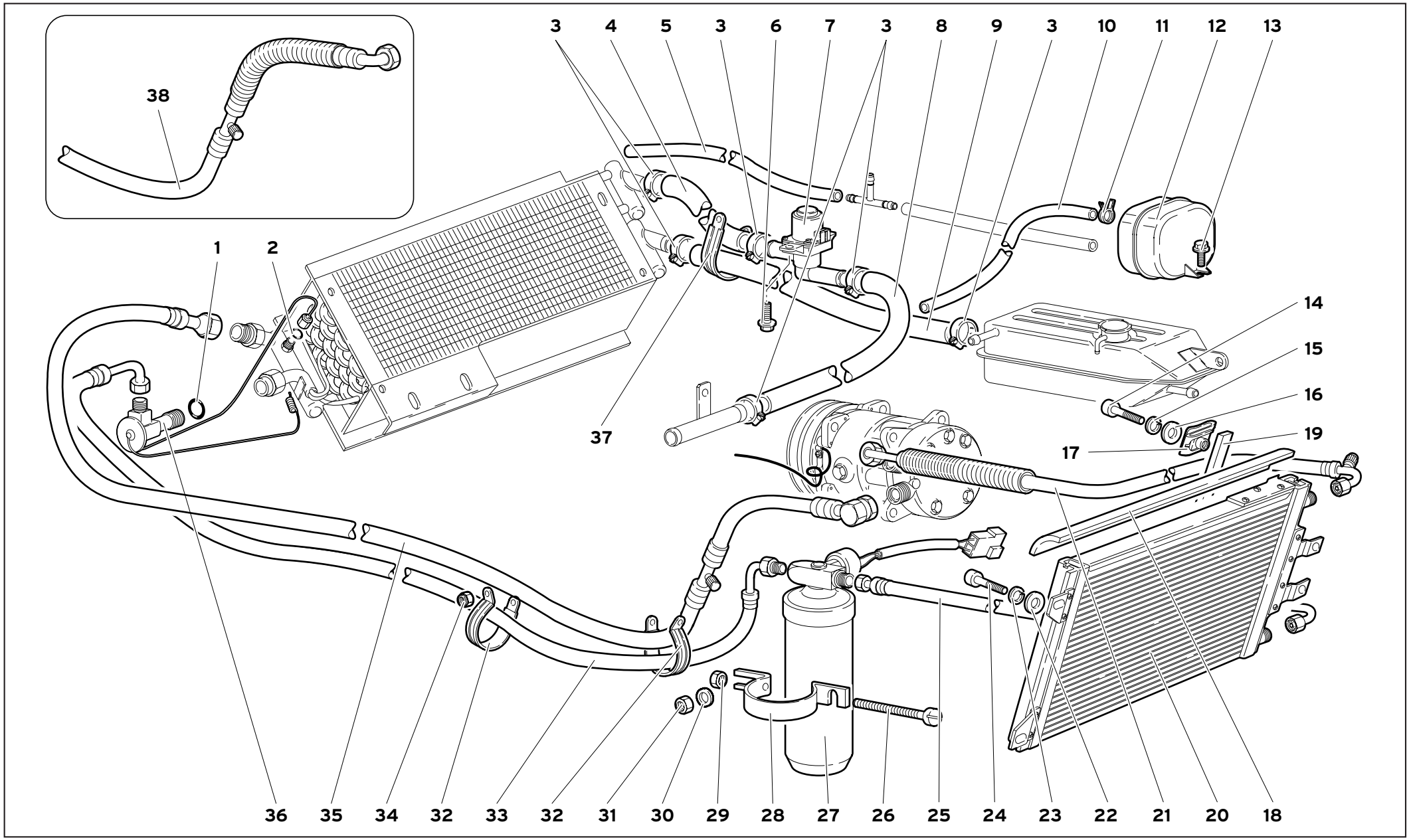


| 45 | MY 99 | IMPIANTO DI CLIMATIZZAZIONE<br>CLIMATE CONTROL<br>SYSTEME DE CLIMATISATION<br>KLIMAANLAGE<br>SISTEMA DE CLIMATIZACIÓN | 45.02.00 | Diablo IV<br>07/1999 |
|---|---|---|---|---|

| Rif.<br>Ref.<br>Réf.<br>Bez.<br>Ref. | Codice<br>Part number<br>Numero des pièces<br>Teilnummer<br>Codigo | Q.tà<br>Q.ty<br>Q.té<br>Stk.<br>C.dad | Versione<br>Version<br>Version<br>Version<br>Versión | DESCRIZIONE | DESCRIPTION | DESCRIPTION | BESCHREIBUNG | DESCRIPCION |
|---|---|---|---|---|---|---|---|---|
| 1 | 004535912 | 1 | | ANELLO TENUTA | SEAL | JOINT D'ETANCHEITE | DICHTRING | JUNTA HERMETICA |
| 2 | 004535915 | 1 | | ANELLO TENUTA | SEAL | JOINT D'ETANCHEITE | DICHTRING | JUNTA HERMETICA |
| 3 | 008832003 | 6 | | FASCETTA | STRAP | COLLIER | HALTEBAND | ABRAZADERA |
| 4 | 004734346 | 1 | | TUBO | PIPE | TUYAU | ROHR | TUBO |
| 5 | 009414600 | 1 | | TUBO | PIPE | TUYAU | ROHR | TUBO |
| 6 | 008700663 | 2 | | VITE | SCREW | VIS | SCHRAUBE | TORNILLO |
| 7 | 006031658 | 1 | | ELETTROVALVOLA | ELECTRO-VALVE | SOUPAPE ELECTRI. | STEUERVENTIL | ELECTROVALVULA |
| 8 | 004734347 | 1 | | TUBO | PIPE | TUYAU | ROHR | TUBO |
| 9 | 001734332 | 1 | | TUBO | PIPE | TUYAU | ROHR | TUBO |
| 10 | 006237078 | 1 | | TUBO | PIPE | TUYAU | ROHR | TUBO |
| 11 | 008830128 | 2 | | FASCETTA | STRAP | COLLIER | HALTEBAND | ABRAZADERA |
| 12 | 001323406 | 1 | | SERBATOIO VUOTO | VACUUM TANK | RESERVOIR DEPRES- | UNTERDRUCKBEHAEL- | DEPOSITO DE VACIO |
| 13 | 008700663 | 2 | | VITE | SCREW | VIS | SCHRAUBE | TORNILLO |
| 14 | 008700614 | 2 | | VITE | SCREW | VIS | SCHRAUBE | TORNILLO |
| 15 | 008410611 | 2 | | RONDELLA | WASHER | RONDELLE | SCHEIBE | ARANDELA |
| 16 | 008400607 | 2 | | RONDELLA | WASHER | RONDELLE | SCHEIBE | ARANDELA |
| 17 | 008220601 | 2 | | MOLLETTA | CLIP | AGRAFE | KLEMMSTUECK | SUJETADOR |
| 18 | 004531592 | 2 | | GUARNIZIONE | GASKET | GUARNITURE | DICHTUNG | GUARNIZIONE |
| 19 | 004531591 | 2 | | GUARNIZIONE | GASKET | GUARNITURE | DICHTUNG | GUARNIZIONE |
| 20 | 0045001234 | 1 | | CONDENSATORE CONDIZIONATORE | A/C CONDENSER | CONDENSATEUR | KONDENSATOR | CONDENSADOR |
| 21 | 0045001269 | 1 | | TUBO | PIPE | TUYAU | ROHR | TUBO |
| 22 | 008400607 | 4 | | RONDELLA | WASHER | RONDELLE | SCHEIBE | ARANDELA |
| 23 | 008410611 | 4 | | RONDELLA | WASHER | RONDELLE | SCHEIBE | ARANDELA |
| 24 | 008700614 | 4 | | VITE | SCREW | VIS | SCHRAUBE | TORNILLO |
| 25 | 0045001270 | 1 | | TUBO | PIPE | TUYAU | ROHR | TUBO |
| 26 | 008700542 | 1 | | VITE | SCREW | VIS | SCHRAUBE | TORNILLO |
| 27 | 0045003629 | 1 | | FILTRO DEIDRATORE | FILTER | FILTRE | FILTER | FILTRO |
| 28 | 004531395 | 1 | | FASCETTA | STRAP | COLLIER | HALTEBAND | ABRAZADERA |
| 29 | 008200503 | 1 | | DADO | NUT | ECROU | MUTTER | TUERCA |
| 30 | 008400801 | 2 | | RONDELLA | WASHER | RONDELLE | SCHEIBE | ARANDELA |
| 31 | 008200804 | 2 | | DADO | NUT | ECROU | MUTTER | TUERCA |
| 32 | 008834401 | 6 | | FASCETTA | STRAP | COLLIER | HALTEBAND | ABRAZADERA |
| 33 | 004535415 | 1 | | TUBO | PIPE | TUYAU | ROHR | TUBO |
| 34 | 008200606 | 8 | | DADO | NUT | ECROU | MUTTER | TUERCA |
| 35 | 004535416 | 1 | | TUBO | PIPE | TUYAU | ROHR | TUBO |
| 36 | 004535412 | 1 | | VALVOLA DI ESPANSIONE | VALVE | SOUPAPE | VENTIL | VALVULA |
| 37 | 008834401 | 2 | | FASCETTA | STRAP | COLLIER | HALTEBAND | ABRAZADERA |
| 38 | 004535935 | 1 | 71 | TUBO | PIPE | TUYAU | ROHR | TUBO |
| 38 | 004535935 | 1 | 96 | TUBO | PIPE | TUYAU | ROHR | TUBO |

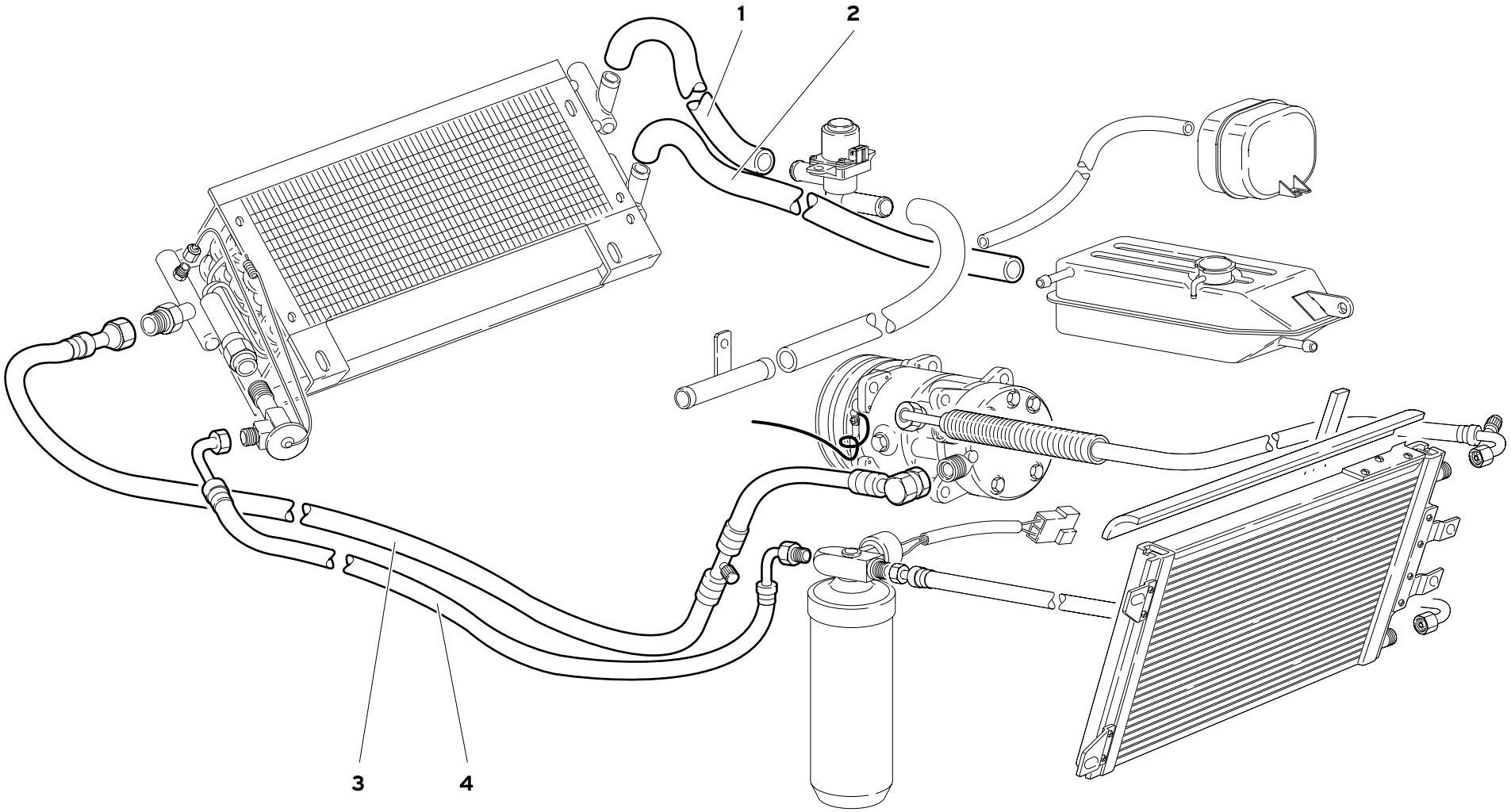
1
2
3
4

| Rif.<br>Ref.<br>Réf.<br>Bez.<br>Ref. | Codice<br>Part number<br>Numero des pièces<br>Teilnummer<br>Codigo | Q.tà<br>Q.ty<br>Q.té<br>Stk.<br>C.dad | Versione<br>Version<br>Version<br>Version<br>Versión | DESCRIZIONE | DESCRIPTION | DESCRIPTION | BESCHREIBUNG | DESCRIPCION |
|---|---|---|---|---|---|---|---|---|
| 1 | 004734657 | 1 | | TUBO | PIPE | TUYAU | ROHR | TUBO |
| 2 | 004732718 | 1 | | TUBO | PIPE | TUYAU | ROHR | TUBO |
| 3 | 004535862 | 1 | | TUBO | PIPE | TUYAU | ROHR | TUBO |
| 4 | 004535863 | 1 | | TUBO | PIPE | TUYAU | ROHR | TUBO |

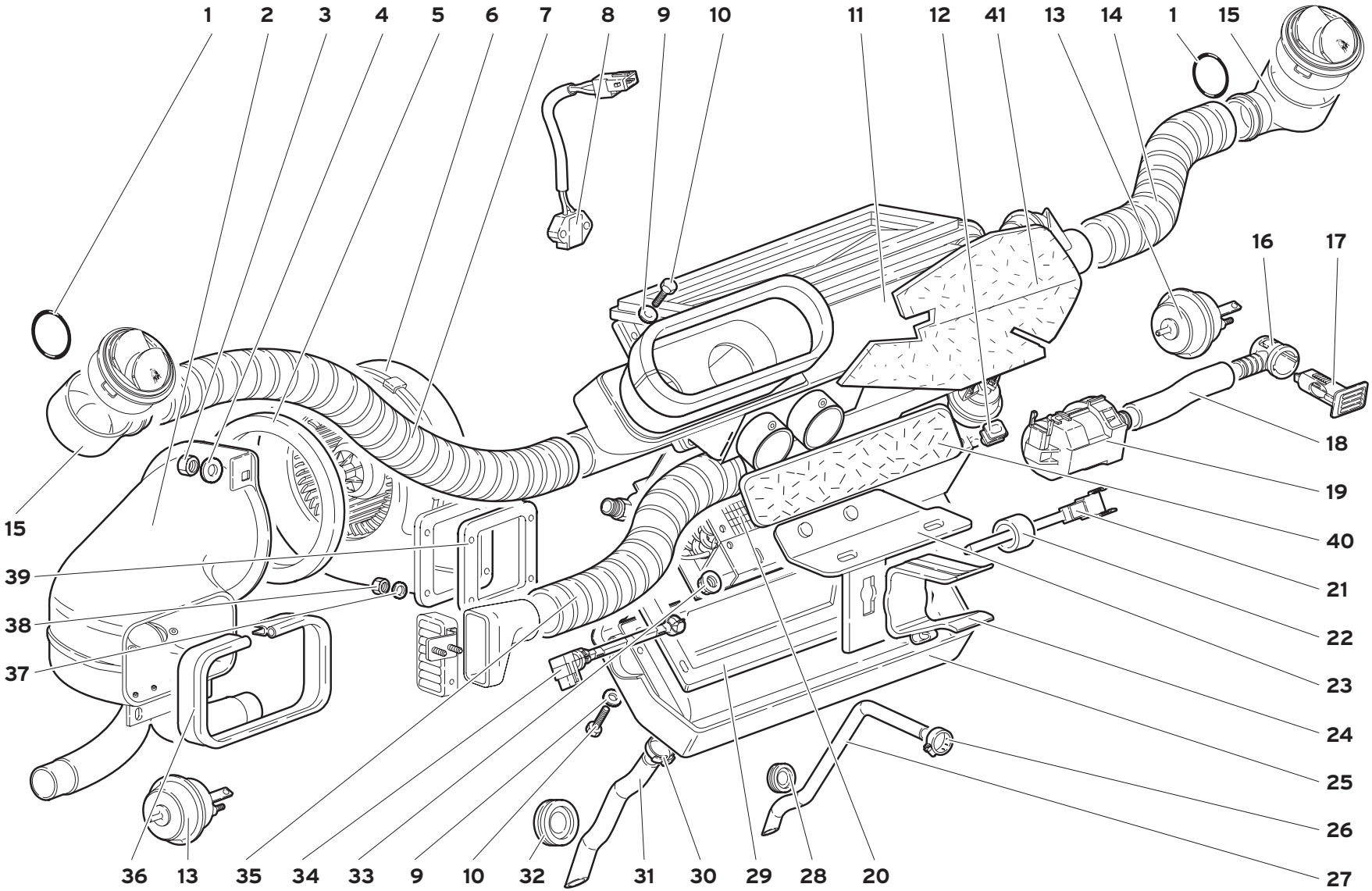


| 45 | MY 99 | IMPIANTO DI CLIMATIZZAZIONE<br>CLIMATE CONTROL<br>SYSTEME DE CLIMATISATION<br>KLIMAANLAGE<br>SISTEMA DE CLIMATIZACIÓN | 45.03.00 | Diablo IV<br>07/1999 |
|---|---|---|---|---|

| Rif.<br>Ref.<br>Réf.<br>Bez.<br>Ref. | Codice<br>Part number<br>Numero des pièces<br>Teilnummer<br>Codigo | Q.tà<br>Q.ty<br>Q.té<br>Stk.<br>C.dad | Versione<br>Version<br>Version<br>Version<br>Versión | DESCRIZIONE | DESCRIPTION | DESCRIPTION | BESCHREIBUNG | DESCRIPCION |
|---|---|---|---|---|---|---|---|---|
| 1 | 008604401 | 2 | | ANELLO TENUTA | SEAL | JOINT D'ETANCHEITE | DICHTRING | JUNTA HERMETICA |
| 2 | 009453182 | 1 | | CONVOGLIATORE | CONVEYOR | CONVOYEUR | LEITBLECH | CANALIZADOR |
| 3 | 008200606 | 3 | | DADO | NUT | ECROU | MUTTER | TUERCA |
| 4 | 008400607 | 3 | | RONDELLA | WASHER | RONDELLE | SCHEIBE | ARANDELA |
| 5 | 009490202 | 1 | | GUARNIZIONE | GASKET | GUARNITURE | DICHTUNG | GUARNIZIONE |
| 6 | 004537176 | 1 | | ELETTROVENTILATORE | ELECTROFAN | VENTILATEUR ELEC. | ELEKTR.LUEFTER | ELECTROVENTIL. |
| 7 | 009414546 | 1 | | TUBO | PIPE | TUYAU | ROHR | TUBO |
| 8 | 004526662 | 1 | | SENSORE TEMP. ESTERNA | TEMPER. SENSOR | SENSEUR | TEMP.-GEBER | SENSOR TEMPERA. |
| 9 | 008400506 | 8 | | RONDELLA | WASHER | RONDELLE | SCHEIBE | ARANDELA |
| 10 | 008100502 | 8 | | VITE | SCREW | VIS | SCHRAUBE | TORNILLO |
| 11 | 0069003353 | 1 | | CONVOGLIATORE | CONVEYOR | CONVOYEUR | LEITBLECH | CANALIZADOR |
| 12 | 008220503 | 8 | | MOLLETTA | CLIP | AGRAFE | KLEMMSTUECK | SUJETADOR |
| 13 | 009414548 | 6 | | ATTUATORE | CONTROL | COMMANDE | BETAETIGUNGS- | MANDO |
| 14 | 009414544 | 1 | | TUBO | PIPE | TUYAU | ROHR | TUBO |
| 15 | 007014135 | 2 | | RACCORDO | CONNECTION | RACCORD | STUTZEN | RACOR ORIENTABLE |
| 16 | 004526666 | 1 | | RACCORDO | CONNECTION | RACCORD | STUTZEN | RACOR |
| 17 | 004526661 | 1 | | SENSORE TEMP. ABITACOLO | TEMPER. SENSOR | SENSEUR | TEMP.-GEBER | SENSOR TEMPERA. |
| 18 | 006032223 | 1 | | TUBO | PIPE | TUYAU | ROHR | TUBO |
| 19 | 004526665 | 1 | | ELETTROVENTOLA | ELECTROFAN | VENTILA. ELECTRIC | ELEKTRIC LUEFTER | ELECTROVENT. |
| 20 | 004535410 | 1 | | EVAPORATORE - RISCALDATORE | EVAPORATOR | EVAPORATEUR | VERDAMPFER | EVAPORADOR |
| 21 | 004526663 | 1 | | SENSORE TEMPERATURA | TEMPER. SENSOR | SENSEUR | TEMP.-GEBER | SENSOR TEMPERA. |
| 22 | 004532839 | 1 | | PROTEZIONE | SHIELD | PROTECTION | ABDECKUNG | DEFENSA |
| 23 | 005931538 | 1 | | SUPPORTO | SUPPORT | SUPPORT | LAGER | SOPORTE |
| 24 | 005931539 | 1 | | SUPPORTO RADIO | SUPPORT | SUPPORT | LAGER | SOPORTE |
| 25 | 009414505 | 1 | | CONVOGLIATORE | CONVEYOR | CONVOYEUR | LEITBLECH | CANALIZADOR |
| 26 | 008831117 | 1 | | FASCETTA | STRAP | COLLIER | HALTEBAND | ABRAZADERA |
| 27 | 009414537 | 1 | | TUBO SCARICO | PIPE | TUYAU | LEITUNG | TUBO |
| 28 | 008612804 | 1 | | GUARNIZIONE | GASKET | GUARNITURE | DICHTUNG | GUARNIZIONE |
| 29 | 009490203 | 1 | | GUARNIZIONE | GASKET | GUARNITURE | DICHTUNG | GUARNIZIONE |
| 30 | 008832806 | 1 | | FASCETTA | STRAP | COLLIER | HALTEBAND | ABRAZADERA |
| 31 | 009414540 | 1 | | TUBO SCARICO | PIPE | TUYAU | ROHR | TUBO |
| 32 | 008611606 | 1 | | GUARNIZIONE | GASKET | GUARNITURE | DICHTUNG | GUARNIZIONE |
| 33 | 008200614 | 2 | | DADO | NUT | ECROU | MUTTER | TUERCA |
| 34 | 004526664 | 1 | | SENSORE TEMP. ARIA | TEMPER. SENSOR | SENSEUR | TEMP.-GEBER | SENSOR TEMPERA. |
| 35 | 009414544 | 1 | | TUBO | PIPE | TUYAU | ROHR | TUBO |
| 36 | 009490201 | 1 | | GUARNIZIONE | GASKET | GUARNITURE | DICHTUNG | GUARNIZIONE |
| 37 | 008400401 | 4 | | RONDELLA | WASHER | RONDELLE | SCHEIBE | ARANDELA |
| 38 | 008200406 | 4 | | DADO | NUT | ECROU | MUTTER | TUERCA |
| 39 | 004731661 | 1 | | GUARNIZIONE | GASKET | GUARNITURE | DICHTUNG | GUARNIZIONE |

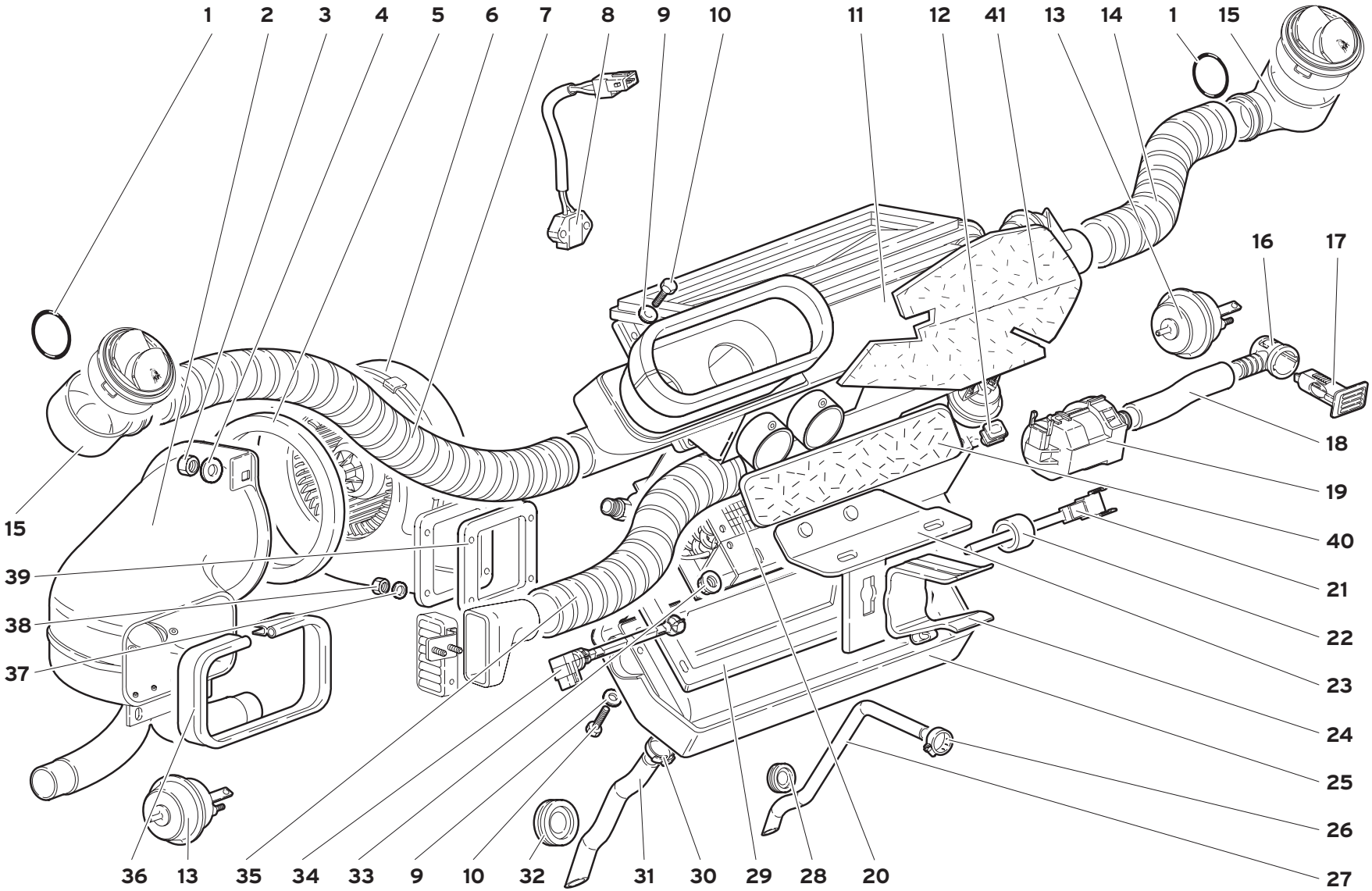


| 45 | MY 99 | IMPIANTO DI CLIMATIZZAZIONE<br>CLIMATE CONTROL<br>SYSTEME DE CLIMATISATION<br>KLIMAANLAGE<br>SISTEMA DE CLIMATIZACIÓN | 45.03.00 | Diablo IV<br>07/1999 |
|---|---|---|---|---|

| Rif.<br>Ref.<br>Réf.<br>Bez.<br>Ref. | Codice<br>Part number<br>Numero des pièces<br>Teilnummer<br>Codigo | Q.tà<br>Q.ty<br>Q.té<br>Stk.<br>C.dad | Versione<br>Version<br>Version<br>Version<br>Versión | DESCRIZIONE | DESCRIPTION | DESCRIPTION | BESCHREIBUNG | DESCRIPCION |
|---|---|---|---|---|---|---|---|---|
| 40 | 0069004894 | 1 | | RIVESTIMENTO | COVERING | REVETEMENT | VERKLEIDUNG | FORRO |
| 41 | 0069005078 | 1 | | RIVESTIMENTO | COVERING | REVETEMENT | VERKLEIDUNG | FORRO |

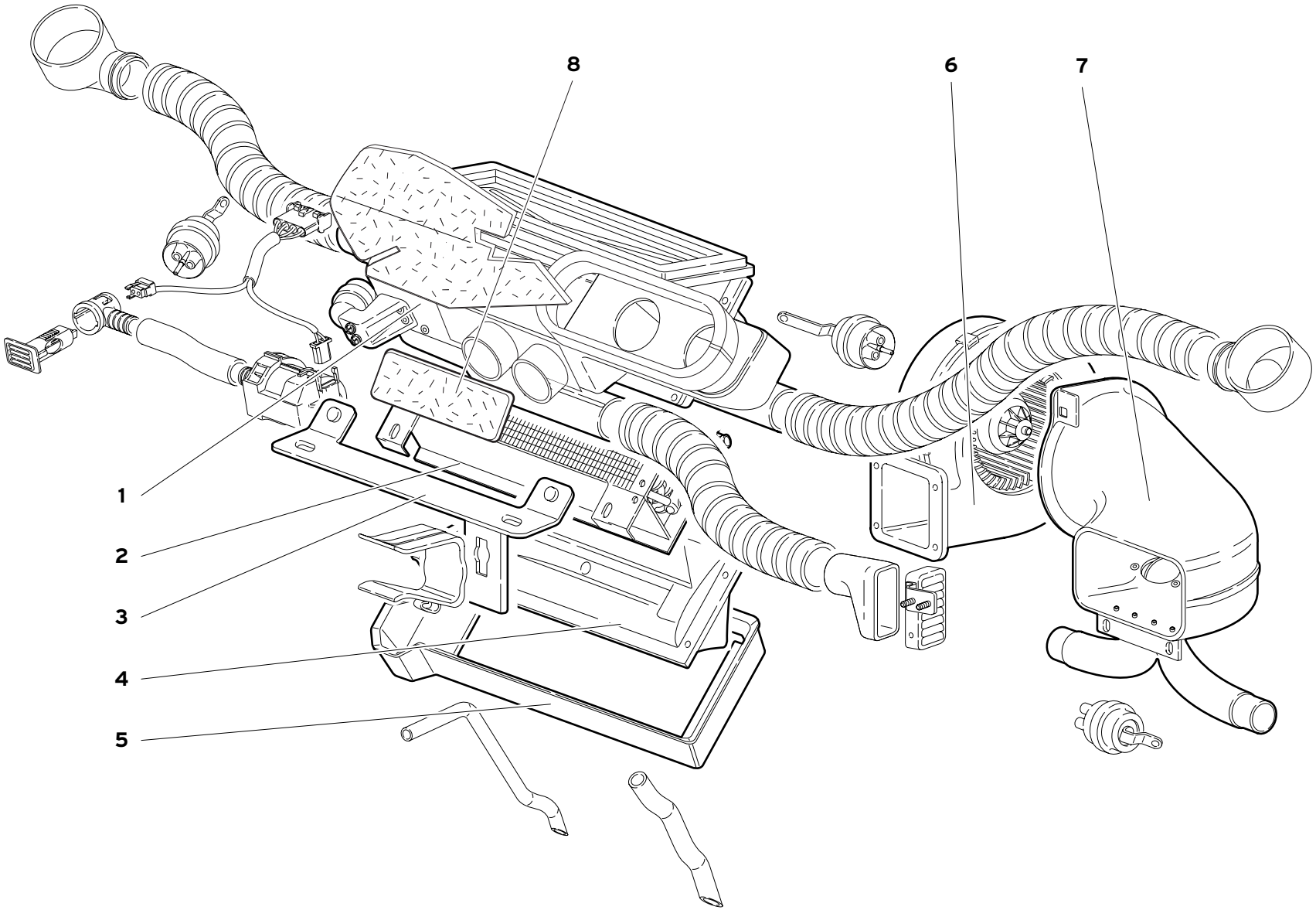
8
6
7
1
2
3
4
5

| Rif.<br>Ref.<br>Réf.<br>Bez.<br>Ref. | Codice<br>Part number<br>Numero des pièces<br>Teilnummer<br>Codigo | Q.tà<br>Q.ty<br>Q.té<br>Stk.<br>C.dad | Versione<br>Version<br>Version<br>Version<br>Versión | DESCRIZIONE | DESCRIPTION | DESCRIPTION | BESCHREIBUNG | DESCRIPCION |
|---|---|---|---|---|---|---|---|---|
| 1 | 0069003431 | 1 | | CONVOGLIATORE | CONVEYOR | CONVOYEUR | LEITBLECH | CANALIZADOR |
| 2 | 004535864 | 1 | | EVAPORATORE - RISCALDATORE | RADIATOR | MASSE RADIANTE | KUEHLERMASSE | MASA RADIANTE |
| 3 | 005937771 | 1 | | SUPPORTO | SUPPORT | SUPPORT | LAGER | SOPORTE |
| 4 | 009414534 | 1 | | CONVOGLIATORE | CONVEYOR | CONVOYEUR | LEITBLECH | CANALIZADOR |
| 5 | 009414539 | 1 | | VASCHETTA | PAN | CUVE | GEFASS | CUBA |
| 6 | 004537175 | 1 | | ELETTROVENTILATORE | ELECTROFAN | VENTILATEUR ELEC. | ELEKTR.LUEFTER | ELECTROVENT. |
| 7 | 009453131 | 1 | | CONVOGLIATORE | CONVEYOR | CONVOYEUR | LEITBLECH | CANALIZADOR |
| 8 | 0069005079 | 1 | | RIVESTIMENTO | COVERING | REVETEMENT | VERKLEIDUNG | FORRO |

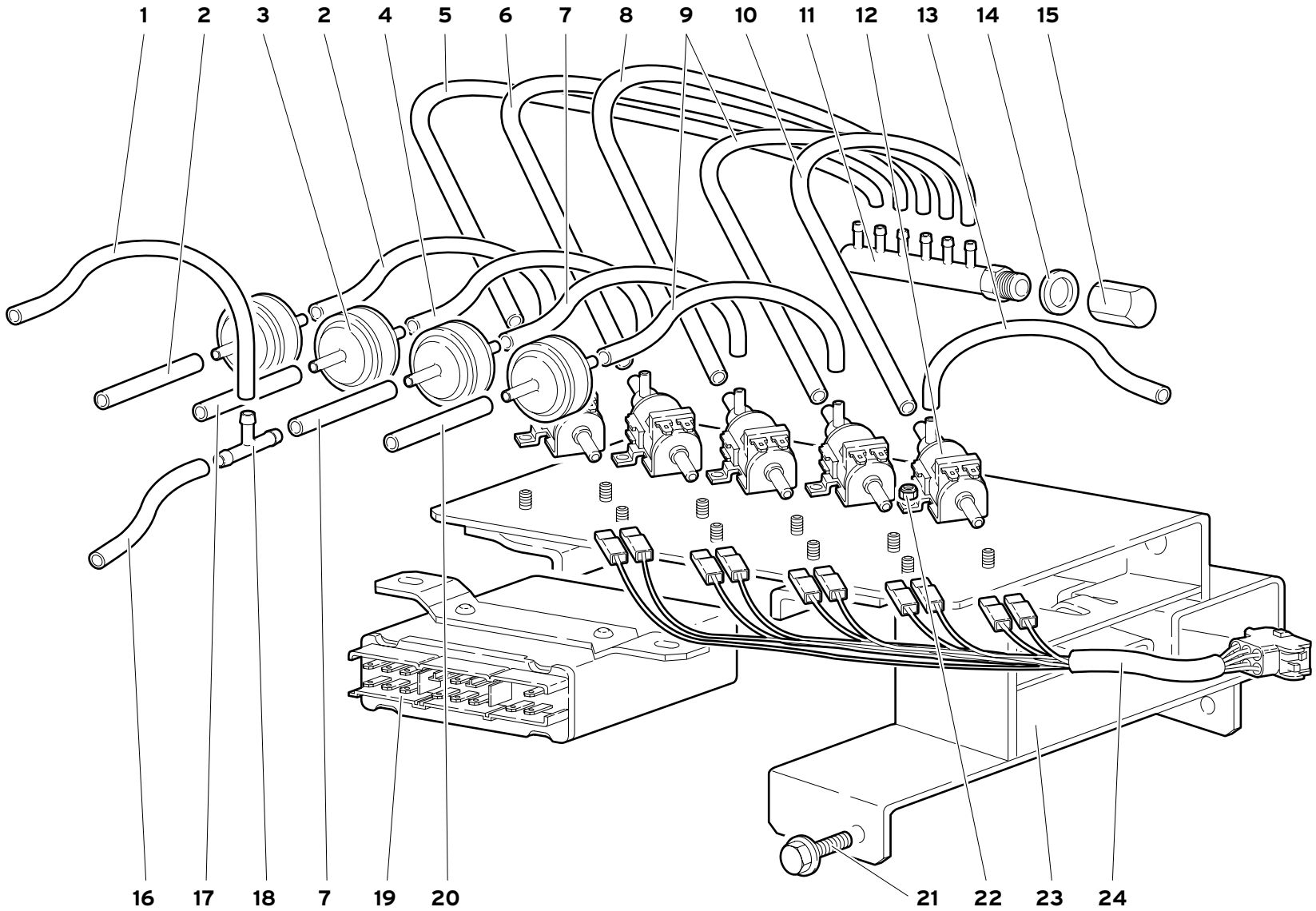
1
2
3
2
4
5
6
7
8
9
10
11
12
13
14
15
16
17
18
7
19
20
21
22
23
24

| Rif.<br>Ref.<br>Réf.<br>Bez.<br>Ref. | Codice<br>Part number<br>Numero des pièces<br>Teilnummer<br>Codigo | Q.tà<br>Q.ty<br>Q.té<br>Stk.<br>C.dad | Versione<br>Version<br>Version<br>Version<br>Versión | DESCRIZIONE | DESCRIPTION | DESCRIPTION | BESCHREIBUNG | DESCRIPCION |
|---|---|---|---|---|---|---|---|---|
| 1 | 009414649 | 1 | | TUBO FLESSIBILE | FLEX. HOSE | TUYAU FLEXIBLE | SCHLAUCH | MANGA FLEXIBLE |
| 2 | 009414643 | 2 | | TUBO FLESSIBILE | FLEX. HOSE | TUYAU FLEXIBLE | SCHLAUCH | MANGA FLEXIBLE |
| 3 | 009414633 | 4 | | VALVOLA | VALVE | SOUPAPE | VENTIL | VALVULA |
| 4 | 009414645 | 1 | | TUBO FLESSIBILE | FLEX. HOSE | TUYAU FLEXIBLE | SCHLAUCH | MANGA FLEXIBLE |
| 5 | 009414642 | 1 | | TUBO FLESSIBILE | FLEX. HOSE | TUYAU FLEXIBLE | SCHLAUCH | MANGA FLEXIBLE |
| 6 | 009414644 | 1 | | TUBO FLESSIBILE | FLEX. HOSE | TUYAU FLEXIBLE | SCHLAUCH | MANGA FLEXIBLE |
| 7 | 009414648 | 2 | | TUBO FLESSIBILE | FLEX. HOSE | TUYAU FLEXIBLE | SCHLAUCH | MANGA FLEXIBLE |
| 8 | 009414647 | 1 | | TUBO FLESSIBILE | FLEX. HOSE | TUYAU FLEXIBLE | SCHLAUCH | MANGA FLEXIBLE |
| 9 | 009414651 | 2 | | TUBO FLESSIBILE | FLEX. HOSE | TUYAU FLEXIBLE | SCHLAUCH | MANGA FLEXIBLE |
| 10 | 009414653 | 1 | | TUBO FLESSIBILE | FLEX. HOSE | TUYAU FLEXIBLE | SCHLAUCH | MANGA FLEXIBLE |
| 11 | 004621565 | 1 | | RACCORDO | CONNECTION | RACCORD | STUTZEN | RACOR ORIENTABLE |
| 12 | 004627300 | 5 | | ELETTROVALVOLA | ELECTRO-VALVE | SOUPAPE ELECTRIQ. | STEUERVENTIL | ELECTROVALVULA |
| 13 | 009414654 | 1 | | TUBO FLESSIBILE | FLEX. HOSE | TUYAU FLEXIBLE | SCHLAUCH | MANGA FLEXIBLE |
| 14 | 008401008 | 1 | | RONDELLA | WASHER | RONDELLE | SCHEIBE | ARANDELA |
| 15 | 009414606 | 1 | | TAPPO | PLUG | BOUCHON | STOPFEN | TAPON |
| 16 | 009414650 | 1 | | TUBO FLESSIBILE | FLEX. HOSE | TUYAU FLEXIBLE | SCHLAUCH | MANGA FLEXIBLE |
| 17 | 009414646 | 1 | | TUBO FLESSIBILE | FLEX. HOSE | TUYAU FLEXIBLE | SCHLAUCH | MANGA FLEXIBLE |
| 18 | 007014169 | 1 | | RACCORDO | CONNECTION | RACCORD | STUTZEN | RACOR |
| 19 | 004526659 | 1 | | CENTRALINA CLIMATIZZAZIONE | ELECTRONIC C. UNIT | DISPOSITIF DE COM. | ELEKTRONENSTEUER. | CENTRALITA ELEC. |
| 20 | 009414652 | 1 | | TUBO FLESSIBILE | FLEX. HOSE | TUYAU FLEXIBLE | SCHLAUCH | MANGA FLEXIBLE |
| 21 | 008700449 | 2 | | VITE | SCREW | VIS | SCHRAUBE | TORNILLO |
| 22 | 008200401 | 10 | | DADO | NUT | ECROU | MUTTER | TUERCA |
| 23 | 009414628 | 1 | | SUPPORTO | SUPPORT | SUPPORT | LAGER | SOPORTE |
| 23 | 009414627 | 1 | 74 | SUPPORTO | SUPPORT | SUPPORT | LAGER | SOPORTE |
| 23 | 009414627 | 1 | 76 | SUPPORTO | SUPPORT | SUPPORT | LAGER | SOPORTE |
| 24 | 006130618 | 1 | | CABLAGGIO ELETTROV. | ELECT CABLE | CABLE | LEITUNG | CABLE |

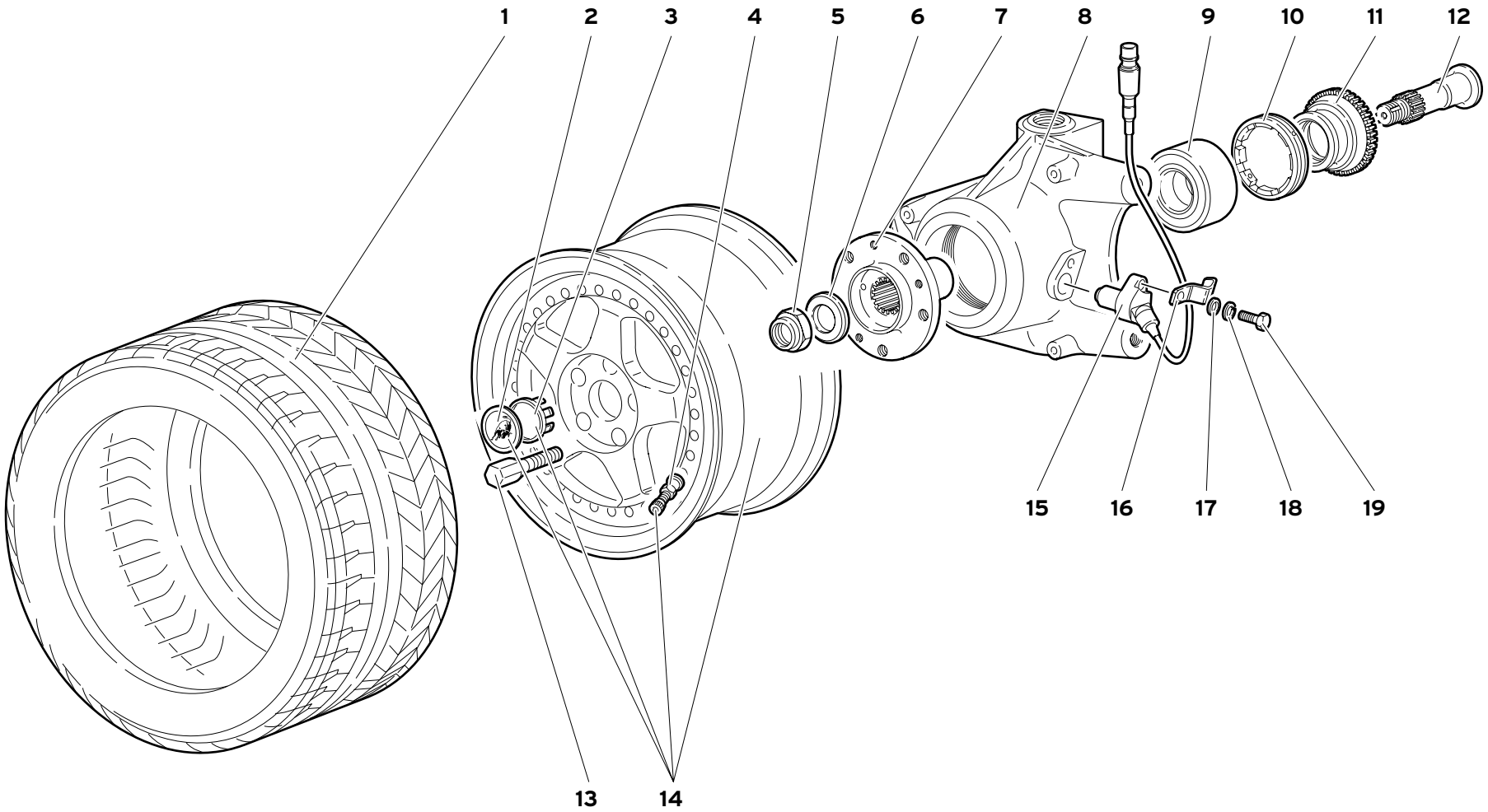
1
2
3
4
5
6
7
8
9
10
11
12
13
14
15
16
17
18
19

| Rif.<br>Ref.<br>Réf.<br>Bez.<br>Ref. | Codice<br>Part number<br>Numero des pièces<br>Teilnummer<br>Codigo | Q.tà<br>Q.ty<br>Q.té<br>Stk.<br>C.dad | Versione<br>Version<br>Version<br>Version<br>Versión | DESCRIZIONE | DESCRIPTION | DESCRIPTION | BESCHREIBUNG | DESCRIPCION |
|---|---|---|---|---|---|---|---|---|
| 1 | 0051000542 | 2 | | PNEUMATICO ANT. 235/35 ZR 18 | FRONT TYRE | PNEU | REIFEN | CUBIERTA |
| 2 | 005236291 | 2 | | FREGIO | ORNAMENT | MOTIF | ZIERSTUECK | EMBELLECEDOR |
| 3 | 005236290 | 2 | | SUPPORTO | SUPPORT | SUPPORT | LAGER | SOPORTE |
| 4 | 005330906 | 2 | | VALVOLA | VALVE | SOUPAPE | VENTIL | VALVULA |
| 5 | 0051001034 | 2 | | DADO | NUT | ECROU | MUTTER | TUERCA |
| 6 | 0051001035 | 2 | | RONDELLA | WASHER | RONDELLE | SCHEIBE | ARANDELA |
| 7 | 0051001039 | 2 | | MOZZO | HUB | MOYEU | NABE | BUJE |
| 8 | 0051000983 | 1 | | PORTAMOZZO SX | LEFT HUB HOUSING | CHAPEAU DE MOYEU | NABENDECKEL | TAPACUBO |
| 8 | 0051000984 | 1 | | PORTAMOZZO DX | RIGHT HUB HOUSING | CHAPEAU DE MOYEU | NABENDECKEL | TAPACUBO |
| 9 | 008514501 | 2 | | CUSCINETTO | BEARING | ROULEMENT | LAGER | RODAMIENTO |
| 10 | 005233369 | 2 | | GHIERA | PLUG | VIROLE | GEWINDERING | VIROLA |
| 11 | 0051001033 | 2 | | RUOTA FONICA | PHONIC WHEEL | ROUE | RAD | RUEDA |
| 12 | 0051001038 | 2 | | PERNO | PIN | AXE | BOLZEN | EJE |
| 13 | 0051001075 | 10 | | COLONNETTA | STUD | COLONNETTE | BOLZEN | ESPARRAGO |
| 14 | 0051004012 | 2 | | CERCHIO RUOTA ANTERIORE | FRONT RIM | JANTE | FELGE | LLANTA |
| 14 | 0051005042 | 2 | 71 | CERCHIO RUOTA ANTERIORE | FRONT RIM | JANTE | FELGE | LLANTA |
| 15 | 0051001139 | 2 | | SENSORE GIRI RUOTA LAVOR. | TYRE REVOLUT. SENS. | SENSEUR | GEBER | SENSOR |
| 16 | 0051001477 | 2 | | SUPPORTO | SUPPORT | SUPPORT | LAGER | SOPORTE |
| 17 | 008400606 | 2 | | RONDELLA | WASHER | RONDELLE | SCHEIBE | ARANDELA |
| 18 | 008410611 | 2 | | RONDELLA | WASHER | RONDELLE | SCHEIBE | ARANDELA |
| 19 | 008100603 | 2 | | VITE | SCREW | VIS | SCHRAUBE | TORNILLO |

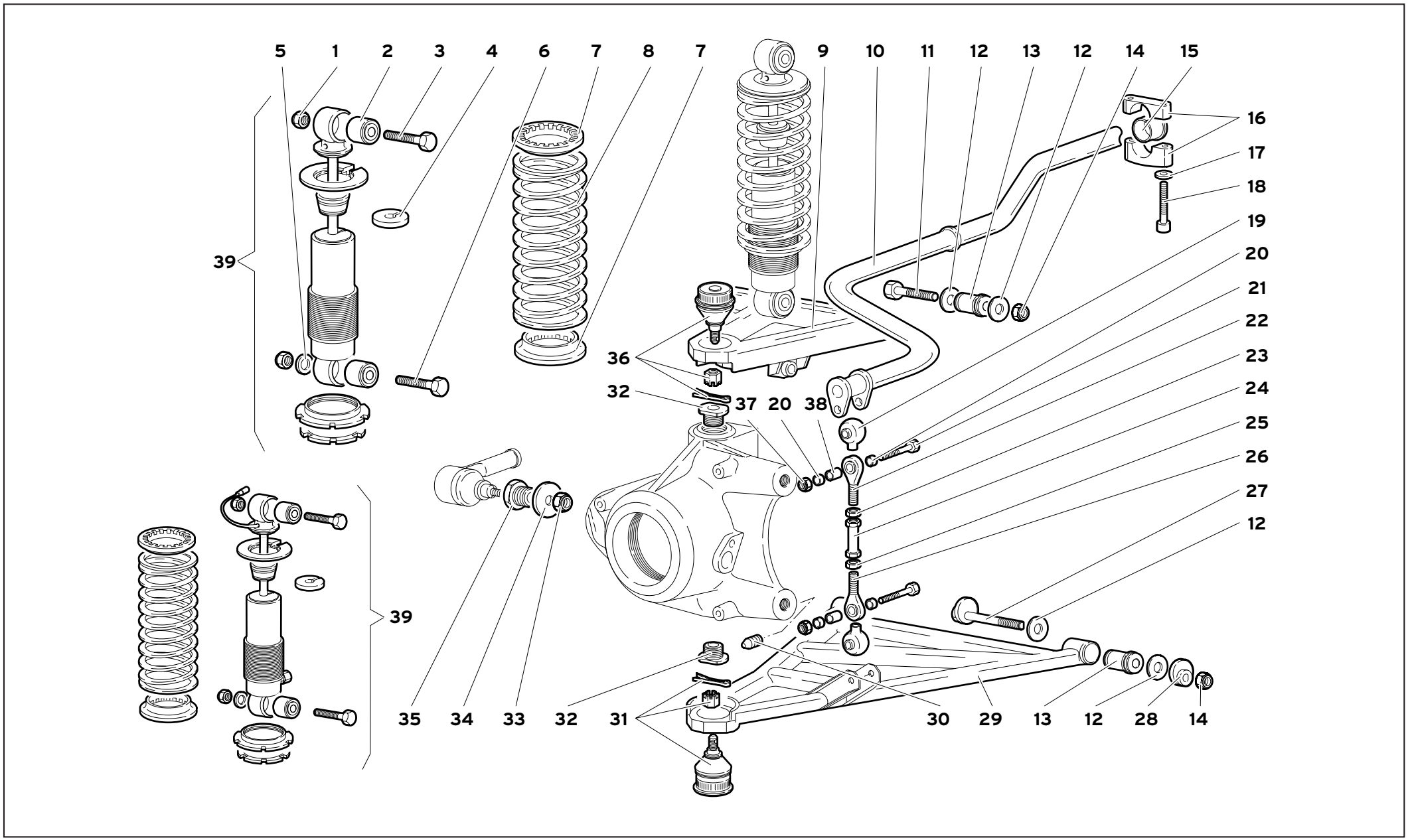


| 51 | MY 99 | SOSPENSIONE ANTERIORE<br>FRONT SUSPENSION<br>SUSPENSION AVANT<br>VORDERE AUFHÄNGUNG<br>SUSPENSIONES DELANTERAS | 51.02.01 | Diablo IV<br>02/2000 |
|---|---|---|---|---|

| Rif.<br>Ref.<br>Réf.<br>Bez.<br>Ref. | Codice<br>Part number<br>Numero des pièces<br>Teilnummer<br>Codigo | Q.tà<br>Q.ty<br>Q.té<br>Stk.<br>C.dad | Versione<br>Version<br>Version<br>Version<br>Versión | DESCRIZIONE | DESCRIPTION | DESCRIPTION | BESCHREIBUNG | DESCRIPCION |
|---|---|---|---|---|---|---|---|---|
| 1 | 008201226 | 4 | | DADO | NUT | ECROU | MUTTER | TUERCA |
| 2 | 005131666 | 4 | | BOCCOLA ELASTICA | RESILIENT BUSHING | BAGUE ELASTIQUE | ELASTISCHE BUECHSE | CASQUILLO ELAS. |
| 3 | 008101269 | 2 | | VITE | SCREW | VIS | SCHRAUBE | TORNILLO |
| 4 | 005134315 | 2 | | DISTANZIALE | SPACER | ENTRETOISE | ABSTANDSTUECK | SEPARADOR |
| 5 | 008401234 | 12 | | RONDELLA | WASHER | RONDELLE | SCHEIBE | ARANDELA |
| 6 | 005133229 | 2 | | VITE | SCREW | VIS | SCHRAUBE | TORNILLO |
| 7 | 005219380 | 4 | | ANELLO GOMMA | RUBBER RING | BAGUE CAOUTCHOUC | GUMMIRING | GUARNICION |
| 8 | 005133618 | 2 | | MOLLA | SPRING | RESSORT | FEDER | RESORTE |
| 9 | 005133344 | 1 | | BRACCIO SUPERIORE DX | ARM | BRAS | ARM | BRAZO |
| 9 | 005133345 | 1 | | BRACCIO SUPERIORE SX | ARM | BRAS | ARM | BRAZO |
| 10 | 005134057 | 1 | | BARRA TORSIONE | TORSION BAR | BARRE DE TORSION | DREHSTABFEDER | BARRA DE TORSION |
| 11 | 008101269 | 4 | | VITE | SCREW | VIS | SCHRAUBE | TORNILLO |
| 12 | 005133170 | | | DISTANZIALE 1 MM | SPACER | ENTRETOISE | ABSTANDSTUECK | SEPARADOR |
| 12 | 005133488 | | | DISTANZIALE 1,5 MM | SPACER | ENTRETOISE | ABSTANDSTUECK | SEPARADOR |
| 12 | 005133489 | | | DISTANZIALE 2 MM | SPACER | ENTRETOISE | ABSTANDSTUECK | SEPARADOR |
| 12 | 005133490 | | | DISTANZIALE 2,5 MM | SPACER | ENTRETOISE | ABSTANDSTUECK | SEPARADOR |
| 12 | 005133169 | | | DISTANZIALE 3 MM | SPACER | ENTRETOISE | ABSTANDSTUECK | SEPARADOR |
| 13 | 008921206 | 8 | | BOCCOLA ELASTICA | RESILIENT BUSHING | BAGUE ELASTIQUE | ELASTISCHE BUECHSE | CASQUILLO ELAS. |
| 14 | 008201226 | 8 | | DADO | NUT | ECROU | MUTTER | TUERCA |
| 15 | 005238302 | 2 | | BOCCOLA | BUSHING | DOUILLE | BUECHSE | CASQUILLO |
| 16 | 005230258 | 2 | | CAVALLOTTO | RETAINER | ARRETOIR | KLEMMSTUECK | SUJETADOR |
| 17 | 008410602 | 4 | | RONDELLA | WASHER | RONDELLE | SCHEIBE | ARANDELA |
| 18 | 008700683 | 4 | | VITE | SCREW | VIS | SCHRAUBE | TORNILLO |
| 19 | 005109714 | 4 | | CUFFIA | BOOT | CAPUCHON | MANSCHETTE | CAPUCHON |
| 20 | 005227297 | 8 | | BOCCOLA | BUSHING | DOUILLE | BUECHSE | CASQUILLO |
| 21 | 008100807 | 4 | | VITE | SCREW | VIS | SCHRAUBE | TORNILLO |
| 22 | 005227296 | 2 | | GIUNTO SFERICO | BALL JOINT | JOINT A ROTULE | KUGELGELENK | ARTICULACION |
| 23 | 008201035 | 2 | | DADO | NUT | ECROU | MUTTER | TUERCA |
| 24 | 005209770 | 2 | | TIRANTE | TIE ROD | TIRANT | STANGE | VARILLA |
| 25 | 008201034 | 2 | | DADO | NUT | ECROU | MUTTER | TUERCA |
| 26 | 005227295 | 2 | | GIUNTO SFERICO | BALL JOINT | JOINT A ROTULE | KUGELGELENK | ARTICULACION |
| 27 | 0052002939 | 4 | | VITE CON ECCENTRICO | CAM SCREW | CAME | EXZENTERBOLZEN | EJE CON LEVA |
| 28 | 005231925 | 4 | | ECCENTRICO | CAM | EXCENTRIQUE | EXZENTER | EXCENTRICA |
| 29 | 005133038 | 1 | | BRACCIO INFERIORE DX | ARM | BRAS | ARM | BRAZO |
| 29 | 005133039 | 1 | | BRACCIO INFERIORE SX | ARM | BRAS | ARM | BRAZO |
| 30 | 008700606 | 4 | | VITE | SCREW | VIS | SCHRAUBE | TORNILLO |
| 31 | 005125860 | 2 | | TESTA A SNODO | COUPLING | JOINT A ROTULE | GELENKKOPF | ARTICULACION |
| 32 | 005126008 | 4 | | BUSSOLA | BUSHING | DOUILLE | GEWINDEBUECHSE | CASQUILLO |
| 33 | 008201003 | 2 | | DADO | NUT | ECROU | MUTTER | TUERCA |
| 34 | 008401030 | 2 | | RONDELLA | WASHER | RONDELLE | SCHEIBE | ARANDELA |
| 35 | 0051001030 | 2 | | BUSSOLA | BUSHING | DOUILLE | GEWINDEBUECHSE | CASQUILLO |
| 36 | 005125861 | 2 | | TESTA A SNODO | COUPLING | JOINT A ROTULE | GELENKKOPF | ARTICULACION |
| 37 | 008200809 | 4 | | DADO | NUT | ECROU | MUTTER | TUERCA |
| 38 | 005227298 | 4 | | BOCCOLA | BUSHING | DOUILLE | BUECHSE | CASQUILLO |
| 39 | 005129802 | 2 | | AMMORTIZZATORE | SHOCK ABSORBER | AMORTISSEUR | STOSSDAEMPFER | AMORTIGUADOR |
| 39 | 005133241 | 2 | | AMMORTIZZATORE (LIFTING SYSTEM) | SHOCK ABSORBER | AMORTISSEUR | STOSSDAEMPFER | AMORTIGUADOR |

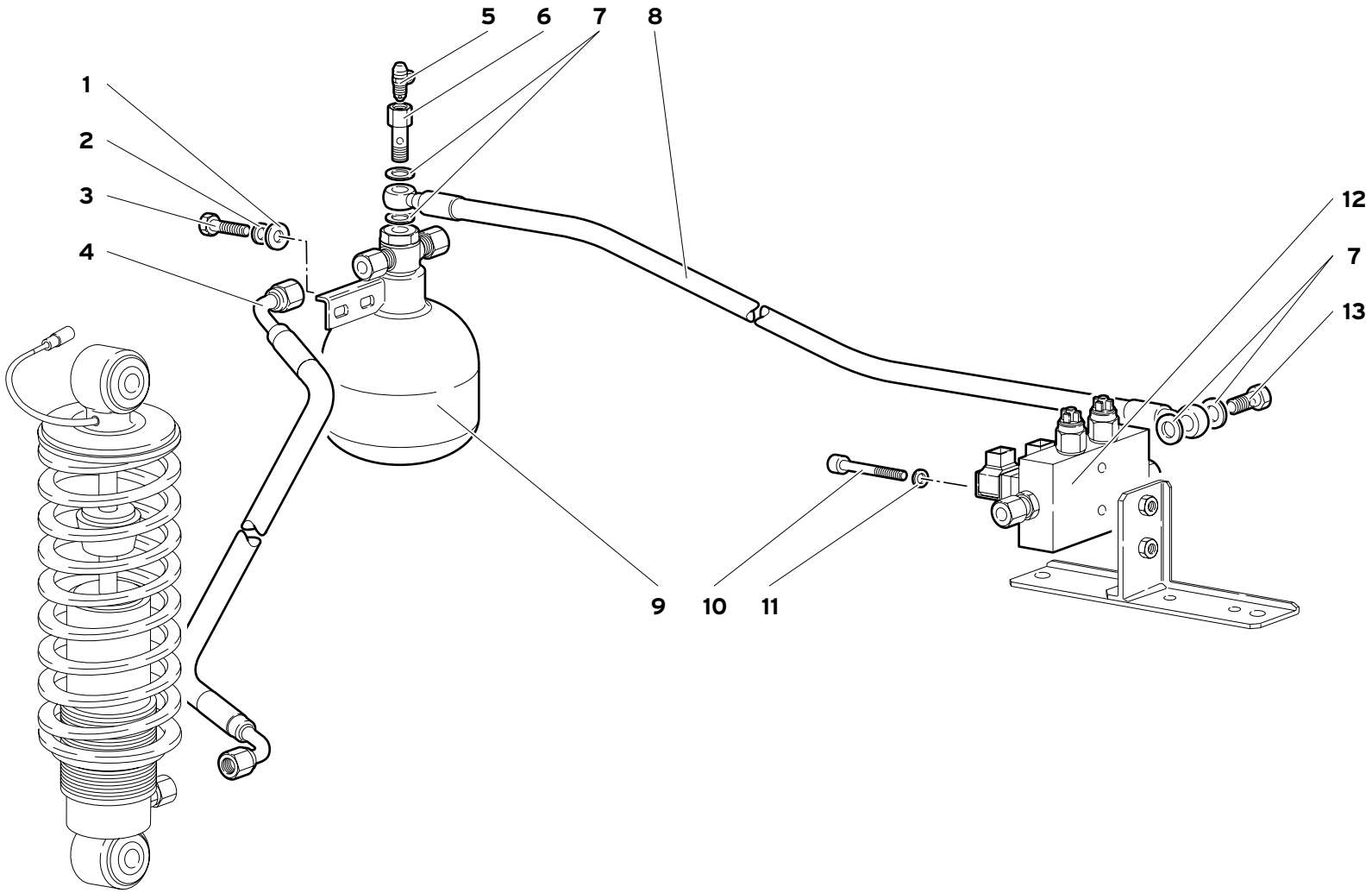


| 51 | MY 99 | IMPIANTO DI SOLLEVAMENTO<br>LIFTING SYSTEM<br>DISPOSITIF DE LEVAGE<br>HEBEANLAGE<br>SISTEMA DE ELEVACIÓN | 51.03.00 | Diablo IV<br>07/1999 |
|---|---|---|---|---|

| Riferimento<br>Reference<br>Référence<br>Bezug<br>Referencia | codice<br>Part number<br>Numero des pièces<br>Teilnummer<br>Codigo | Q.tà<br>Q.ty<br>Q.té<br>Stk.<br>C.dad | Versione<br>Version<br>Version<br>Version<br>Versión | DESCRIZIONE | DESCRIPTION | DESCRIPTION | BESCHREIBUNG | DESCRIPCION |
|---|---|---|---|---|---|---|---|---|
| 1 | 008400607 | 2 | | RONDELLA | WASHER | RONDELLE | SCHEIBE | ARANDELA |
| 2 | 008410601 | 2 | | RONDELLA | WASHER | RONDELLE | SCHEIBE | ARANDELA |
| 3 | 008100618 | 2 | | VITE | SCREW | VIS | SCHRAUBE | TORNILLO |
| 4 | 005138204 | 2 | | TUBO | PIPE | TUYAU | ROHR | TUBO |
| 4 | 0051001598 | 2 | 74 | TUBO | PIPE | TUYAU | ROHR | TUBO |
| 4 | 0051001598 | 2 | 76 | TUBO | PIPE | TUYAU | ROHR | TUBO |
| 5 | 005136497 | 1 | | VITE SPURGO | BLEEDING SCREW | VIS DE PURGE | ABBLASESCHRAUBE | TORNILLO |
| 6 | 005136496 | 1 | | VITE FORATA | SCREW | VIS | SCHRAUBE | TORNILLO |
| 7 | 005133246 | 4 | | RONDELLA | WASHER | RONDELLE | SCHEIBE | ARANDELA |
| 8 | 005134580 | 1 | | TUBO | PIPE | TUYAU | ROHR | TUBO |
| 9 | 005133242 | 1 | | SERBATOIO | RESERVOIR | RESERVOIR | BEHAELTER | DEPOSITO |
| 10 | 008700608 | 2 | | VITE | SCREW | VIS | SCHRAUBE | TORNILLO |
| 11 | 008410602 | 2 | | RONDELLA | WASHER | RONDELLE | SCHEIBE | ARANDELA |
| 12 | 005134571 | 1 | | ELETTROVALVOLA | ELECTRO-VALVE | SOUPAPE ELECTRI. | STEUERVENTIL | ELECTROVALVULA |
| 13 | 005133245 | 1 | | VITE FORATA | SCREW | VIS | SCHRAUBE | TORNILLO |
| | | | | **PER VETTURE CON "LIFTING SYSTEM"** | **FOR VEHICLES WITH "LIFTING SYSTEM"** | **POUR VOITURES AVEC "LIFTING SYSTEM"** | **FÜR FAHRZENGE MIT "LIFTING SYSTEM"** | **PARA VEHÍCULOS CON "LIFTING SYSTEM"** |

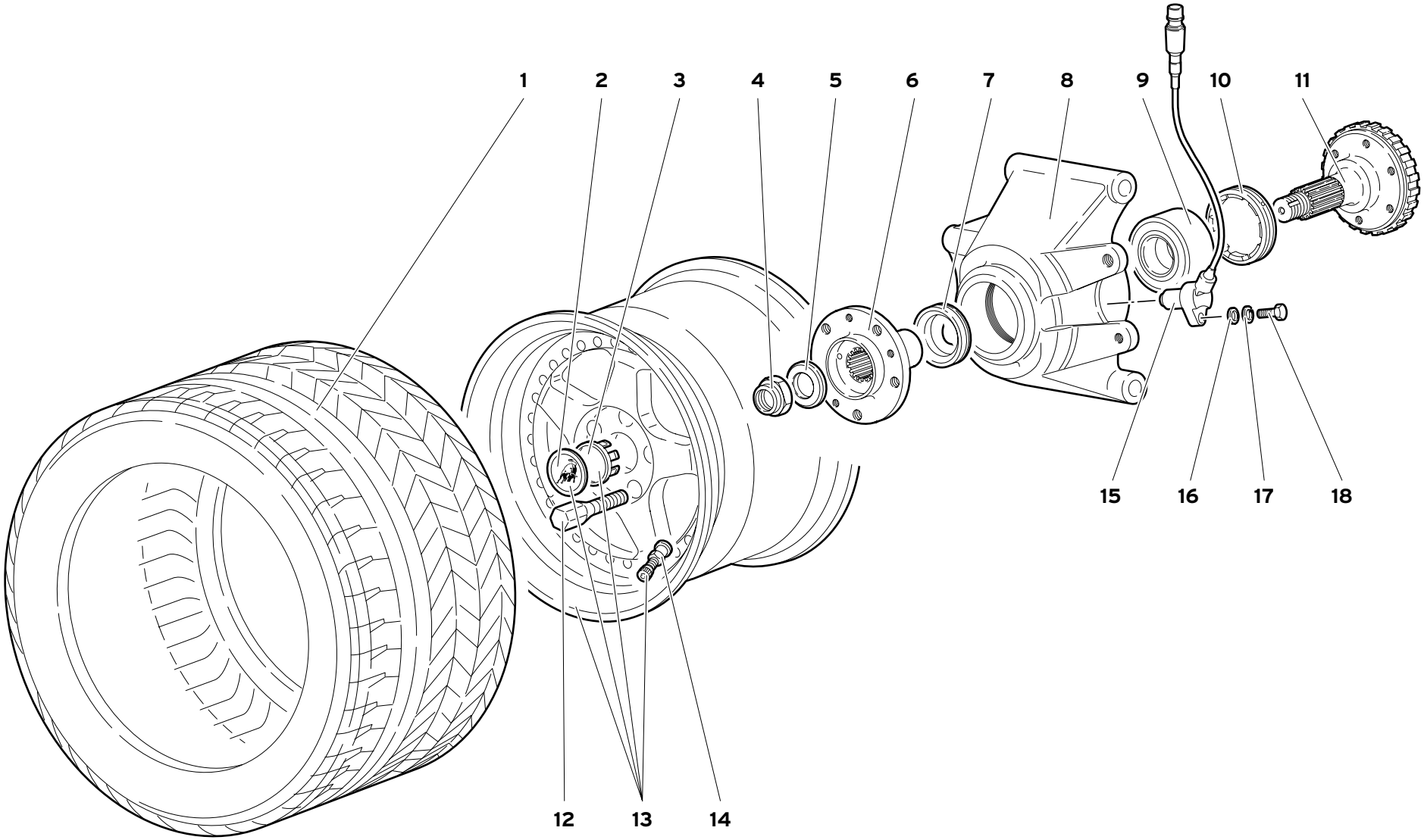


| 52 | MY 99 | RUOTA E PORTAMOZZO POSTERIORE<br>REAR WHEEL AND HUB CARRIER<br>ROUE ET PORTE-MOYEU ARRIERE<br>HINTERRAD UND HINTERER RADNABENHALTER<br>RUEDA Y PORTABUJE POSTERIOR | 52.01.00 | Diablo IV<br>07/1999 |
|---|---|---|---|---|

| Rif.<br>Ref.<br>Réf.<br>Bez.<br>Ref. | Codice<br>Part number<br>Numero des pièces<br>Teilnummer<br>Codigo | Q.tà<br>Q.ty<br>Q.té<br>Stk.<br>C.dad | Versione<br>Version<br>Version<br>Version<br>Versión | DESCRIZIONE | DESCRIPTION | DESCRIPTION | BESCHREIBUNG | DESCRIPCION |
|---|---|---|---|---|---|---|---|---|
| 1 | 005334365 | 2 | | PNEUMATICO POST. 335/30 ZR 18 | REAR TYRE | PNEU | REIFEN | CUBIERTA |
| 2 | 005236291 | 2 | | FREGIO | ORNAMENT | MOTIF | ZIERSTUECK | EMBELLECEDOR |
| 3 | 005236290 | 2 | | SUPPORTO | SUPPORT | SUPPORT | LAGER | SOPORTE |
| 4 | 005231418 | 2 | | DADO | NUT | ECROU | MUTTER | TUERCA |
| 5 | 008403103 | 2 | | RONDELLA | WASHER | RONDELLE | SCHEIBE | ARANDELA |
| 6 | 0052001022 | 2 | | MOZZO | HUB | MOYEU | NABE | BUJE |
| 7 | 005238073 | 2 | | DISTANZIALE | SPACER | ENTRETOISE | ABSTANDSTUECK | SEPARADOR |
| 8 | 0052000979 | 1 | | PORTAMOZZO SX | LEFT HUB HOUSING | CHAPEAU DE MOYEU | NABENDECKEL | TAPACUBO |
| 8 | 0052000980 | 1 | | PORTAMOZZO DX | RIGHT HUB HOUSING | CHAPEAU DE MOYEU | NABENDECKEL | TAPACUBO |
| 9 | 008514501 | 2 | | CUSCINETTO | BEARING | ROULEMENT | LAGER | RODAMIENTO |
| 10 | 005233369 | 2 | | GHIERA | PLUG | VIROLE | GEWINDERING | VIROLA |
| 11 | 0052002593 | 2 | | FLANGIA | FLANGE | BRIDE | FLANSCH | BRIDA |
| 12 | 0051001075 | 10 | | COLONNETTA | STUD | COLONNETTE | BOLZEN | ESPARRAGO |
| 13 | 0052004013 | 2 | | CERCHIO RUOTA POSTERIORE | REAR RIM | JANTE | FELGE | LLANTA |
| 13 | 0052005043 | 2 | 71 | CERCHIO RUOTA POSTERIORE | REAR RIM | JANTE | FELGE | LLANTA |
| 14 | 005330906 | 2 | | VALVOLA | VALVE | SOUPAPE | VENTIL | VALVULA |
| 15 | 0051001139 | 2 | | SENSORE GIRI RUOTA LAVOR. | TYRE REVOLUT. SENS. | SENSEUR | GEBER | SENSOR |
| 16 | 008400606 | 2 | | RONDELLA | WASHER | RONDELLE | SCHEIBE | ARANDELA |
| 17 | 008410611 | 2 | | RONDELLA | WASHER | RONDELLE | SCHEIBE | ARANDELA |
| 18 | 008100603 | 2 | | VITE | SCREW | VIS | SCHRAUBE | TORNILLO |

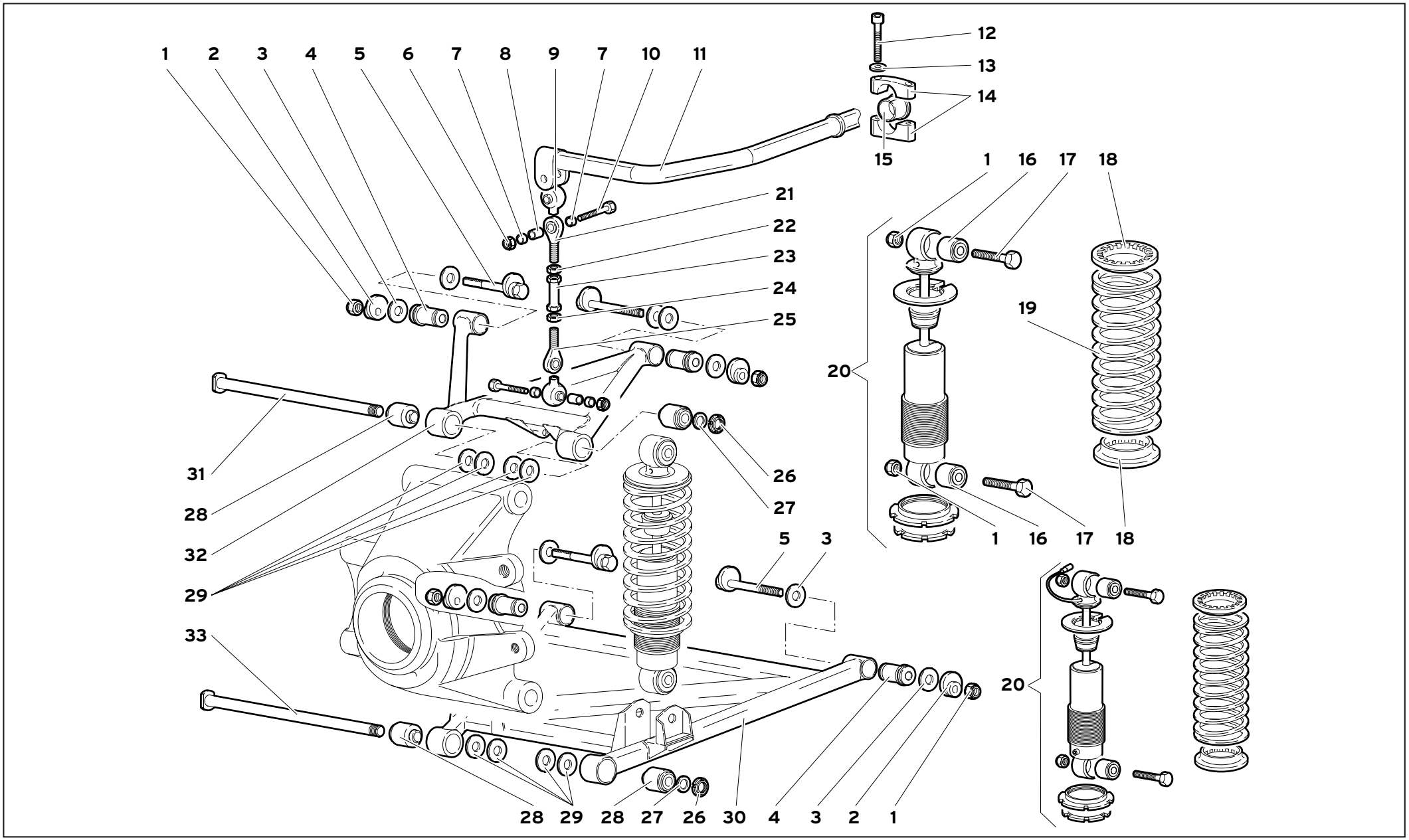


| 52 | MY 99 | SOSPENSIONE POSTERIORE<br>REAR SUSPENSION<br>SUSPENSION ARRIERE<br>HINTERE AUFHÄNGUNG<br>SUSPENSIÓN POSTERIOR | 52.02.01 | Diablo IV<br>02/2000 |
|---|---|---|---|---|

| Rif.<br>Ref.<br>Réf.<br>Bez.<br>Ref. | Codice<br>Part number<br>Numero des pièces<br>Teilnummer<br>Codigo | Q.tà<br>Q.ty<br>Q.té<br>Stk.<br>C.dad | Versione<br>Version<br>Version<br>Version<br>Versión | DESCRIZIONE | DESCRIPTION | DESCRIPTION | BESCHREIBUNG | DESCRIPCION |
|---|---|---|---|---|---|---|---|---|
| 1 | 008201226 | 8 | | DADO | NUT | ECROU | MUTTER | TUERCA |
| 2 | 005231925 | 8 | | ECCENTRICO | CAM | EXCENTRIQUE | EXZENTER | EXCENTRICA |
| 3 | 005133170 | | | SPESSORE 1 MM | SHIM | CALE D'EPAISSEUR | DISTANZSCHEIBE | SUPLEMENTO |
| 3 | 005133488 | | | SPESSORE 1,5 MM | SHIM | CALE D'EPAISSEUR | DISTANZSCHEIBE | SUPLEMENTO |
| 3 | 005133489 | | | SPESSORE 2 MM | SHIM | CALE D'EPAISSEUR | DISTANZSCHEIBE | SUPLEMENTO |
| 3 | 005133490 | | | SPESSORE 2,5 MM | SHIM | CALE D'EPAISSEUR | DISTANZSCHEIBE | SUPLEMENTO |
| 3 | 005133169 | | | SPESSORE 3 MM | SHIM | CALE D'EPAISSEUR | DISTANZSCHEIBE | SUPLEMENTO |
| 4 | 008921206 | 8 | | BOCCOLA ELASTICA | RESILIENT BUSHING | BAGUE ELASTIQUE | ELASTISCHE BUECHSE | CASQUILLO ELASTI. |
| 5 | 0052002939 | 8 | | PERNO CON ECCENTRICO | CAM PIN | CAME | EXZENTERBOLZEN | EJE CON LEVA |
| 6 | 008200809 | 4 | | DADO | NUT | ECROU | MUTTER | TUERCA |
| 7 | 005227297 | 8 | | BOCCOLA | BUSHING | DOUILLE | BUECHSE | CASQUILLO |
| 8 | 005227298 | 4 | | BOCCOLA | BUSHING | DOUILLE | BUECHSE | CASQUILLO |
| 9 | 005109714 | 4 | | CUFFIA | BOOT | CAPUCHON | MANSCHETTE | CAPUCHON |
| 10 | 008100807 | 4 | | VITE | SCREW | VIS | SCHRAUBE | TORNILLO |
| 11 | 005234393 | 1 | | BARRA TORSIONE | TORSION BAR | BARRE DE TORSION | DREHSTABFEDER | BARRA DE TORSION |
| 12 | 008700683 | 4 | | VITE | SCREW | VIS | SCHRAUBE | TORNILLO |
| 13 | 008410602 | 4 | | RONDELLA | WASHER | RONDELLE | SCHEIBE | ARANDELA |
| 14 | 005230258 | 2 | | CAVALLOTTO | RETAINER | ARRETOIR | KLEMMSTUECK | SUJETADOR |
| 15 | 005238302 | 2 | | BOCCOLA | BUSHING | DOUILLE | BUECHSE | CASQUILLO |
| 16 | 005131666 | 8 | | BOCCOLA ELASTICA | RESILIENT BUSHING | BAGUE ELASTIQUE | ELASTISCHE BUECHSE | CASQUILLO ELASTI. |
| 17 | 008101269 | 8 | | VITE | SCREW | VIS | SCHRAUBE | TORNILLO |
| 18 | 005219380 | 8 | | ANELLO | RING | BAGUE | RING | ANILLO |
| 19 | 005226157 | 4 | | MOLLA | SPRING | RESSORT | FEDER | RESORTE |
| 20 | 005233269 | 4 | | AMMORTIZZATORE | SHOCK ABSORBER | AMORTISSEUR | STOSSDAEMPFER | AMORTIGUADOR |
| 20 | 005233166 | 4 | | AMMORTIZZATORE (LIFTING SYSTEM) | SHOCK ABSORBER | AMORTISSEUR | STOSSDAEMPFER | AMORTIGUADOR |
| 21 | 005227296 | 2 | | GIUNTO SFERICO | BALL JOINT | JOINT A ROTULE | KUGELGELENK | ARTICULACION |
| 22 | 008201034 | 2 | | DADO | NUT | ECROU | MUTTER | TUERCA |
| 23 | 005209770 | 2 | | TIRANTE | TIE ROD | TIRANT | STANGE | VARILLA |
| 24 | 008201035 | 2 | | DADO | NUT | ECROU | MUTTER | TUERCA |
| 25 | 005227295 | 2 | | GIUNTO SFERICO | BALL JOINT | JOINT A ROTULE | KUGELGELENK | ARTICULACION |
| 26 | 008251702 | 4 | | GHIERA | PLUG | VIROLE | GEWINDERING | VIROLA |
| 27 | 008401708 | 4 | | RONDELLA | WASHER | RONDELLE | SCHEIBE | ARANDELA |
| 28 | 005225207 | 8 | | BOCCOLA ELASTICA | RESILIENT BUSHING | BAGUE ELASTIQUE | ELASTISCHE BUECHSE | CASQUILLO ELASTI. |
| 29 | 008401710 | 24 | | RONDELLA | WASHER | RONDELLE | SCHEIBE | ARANDELA |
| 30 | 005225906 | 1 | | BRACCIO INFERIORE DX | ARM | BRAS | ARM | BRAZO |
| 30 | 005225907 | 1 | | BRACCIO INFERIORE SX | ARM | BRAS | ARM | BRAZO |
| 31 | 005225204 | 2 | | PERNO | PIN | AXE | BOLZEN | EJE |
| 32 | 005225909 | 1 | | BRACCIO SUPERIORE SX | ARM | BRAS | ARM | BRAZO |
| 32 | 005225908 | 1 | | BRACCIO SUPERIORE DX | ARM | BRAS | ARM | BRAZO |
| 33 | 005225205 | 2 | | PERNO | PIN | AXE | BOLZEN | EJE |

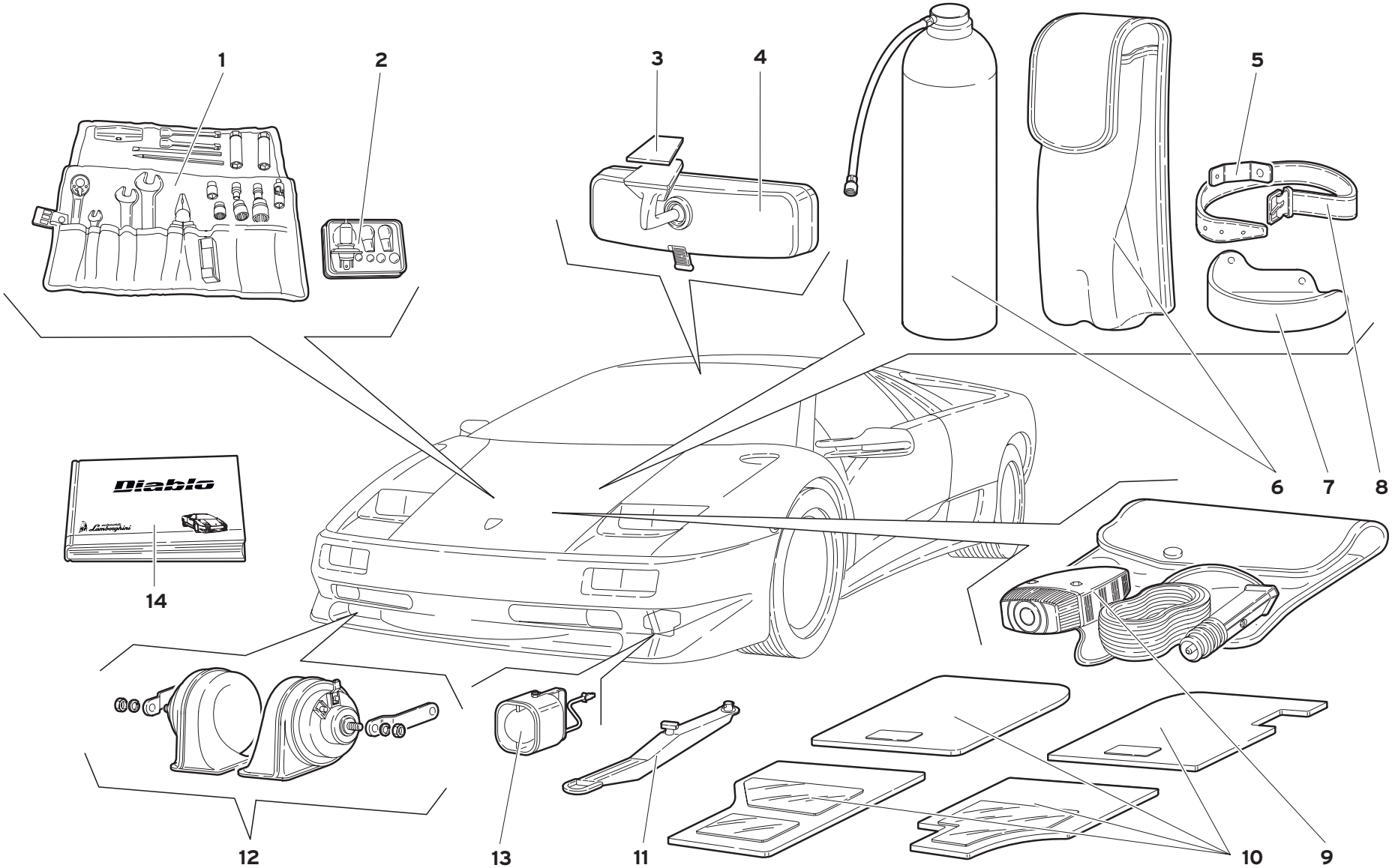


| 59 | MY 99 | ACCESSORI<br>ACCESSORIES<br>ACCESSOIRES<br>ZUBEHÖR<br>ACCESORIOS | 59.01.00 | Diablo JV<br>07/1999 |
|---|---|---|---|---|

| Rif.<br>Ref.<br>Réf.<br>Bez.<br>Ref. | Codice<br>Part number<br>Numero des pièces<br>Teilnummer<br>Codigo | Q.tà<br>Q.ty<br>Q.té<br>Stk.<br>C.dad | Versione<br>Version<br>Version<br>Version<br>Versión | DESCRIZIONE | DESCRIPTION | DESCRIPTION | BESCHREIBUNG | DESCRIPCION |
|---|---|---|---|---|---|---|---|---|
| 1 | 004830512 | 1 | | BORSA CON UTENSILI | TOOL KIT W/BAG | TROUSSE AVEC OU- | WERKZEUGTASCHE | BOLSA DE HERRA- |
| 2 | 0048002388 | 1 | | KIT LAMPADINE | KIT BULBS | KIT LAMPES | KIT LAMPEN | KIT BOMBILLAS |
| 2 | 004832717 | 1 | 71 | KIT LAMPADINE | KIT BULBS | KIT LAMPES | KIT LAMPEN | KIT BOMBILLAS |
| 2 | 004832717 | 1 | 96 | KIT LAMPADINE | KIT BULBS | KIT LAMPES | KIT LAMPEN | KIT BOMBILLAS |
| 3 | 009490409 | 1 | | ADESIVO | ADHESIV | ADHESIF | KLEBEMITTEL | ADHESIVO |
| 4 | 009490415 | 1 | | SPECCHIO RETROVISORE | REAR VIEW MIRROR | RETROVISEUR | RUECKBLICKSPIEGEL | ESPEJO RETROVIS. |
| 5 | 004836126 | 2 | | SUPPORTO | SUPPORT | SUPPORT | LAGER | SOPORTE |
| 6 | 004834670 | 1 | | BOMBOLETTA RIPARAGOMMA | INFLATOR | BOMBE | REIFENFULLFLASCHE | BOMBA |
| 7 | 009411107 | 1 | | SUPPORTO DX | RIGHT SUPPORT | SUPPORT | LAGER | SOPORTE |
| 7 | 009411108 | 1 | | SUPPORTO SX | LEFT SUPPORT | SUPPORT | LAGER | SOPORTE |
| 8 | 004831747 | 2 | | CINTURA | BELT | CEINTURE | SICHERHEITSGURT | CINTURON |
| 9 | 004831304 | 1 | | LAMPADA TRASPORTABILE | INSPECTION LAMP | LAMPE BALADEUSE | HANDLEUCHTE | LAMPARA DE INSP. |
| 10 | 009458058 | 1 | | SERIE TAPPETI | SET OF MATS | SERIE DE TAPIS | SATZ MATTEN | JUEGO ALFOMBRIL. |
| 10 | 009458044 | 1 | 74 | SERIE TAPPETI | SET OF MATS | SERIE DE TAPIS | SATZ MATTEN | JUEGO ALFOMBRIL. |
| 10 | 009458044 | 1 | 76 | SERIE TAPPETI | SET OF MATS | SERIE DE TAPIS | SATZ MATTEN | JUEGO ALFOMBRIL. |
| 11 | 004129973 | 1 | | GANCIO DI TRAINO | TOW HOOK | CROCHET D'ATTELAGE | ZUGHAKEN | ENGANCHE DE REM. |
| 12 | 005935217 | 1 | | KIT AVVISATORI | HORN ASSY | AVERTISSEURS | SATZ SIGNALHOERN. | GRUPO AVISADOR |
| 13 | 0061001924 | 1 | | SIRENA ANTIFURTO | ANTITHEFT SIREN | SIRENE ANTIVOL | DIEBSTAHLSCHUTZ SIRENE | SIRENA ANTIRROBO |
| 14 | 901325743 | 1 | | LIBRETTO USO E MANUTENZIONE PER "DIABLO MY 99" (I, F, GB) | "DIABLO " OWNER B. | LIVRE | BUCH | LIBRO |
| 14 | 901325744 | 1 | | LIBRETTO USO E MANUTENZIONE PER "DIABLO MY 99" (D, E, GB) | "DIABLO " OWNER B. | LIVRE | BUCH | LIBRO |