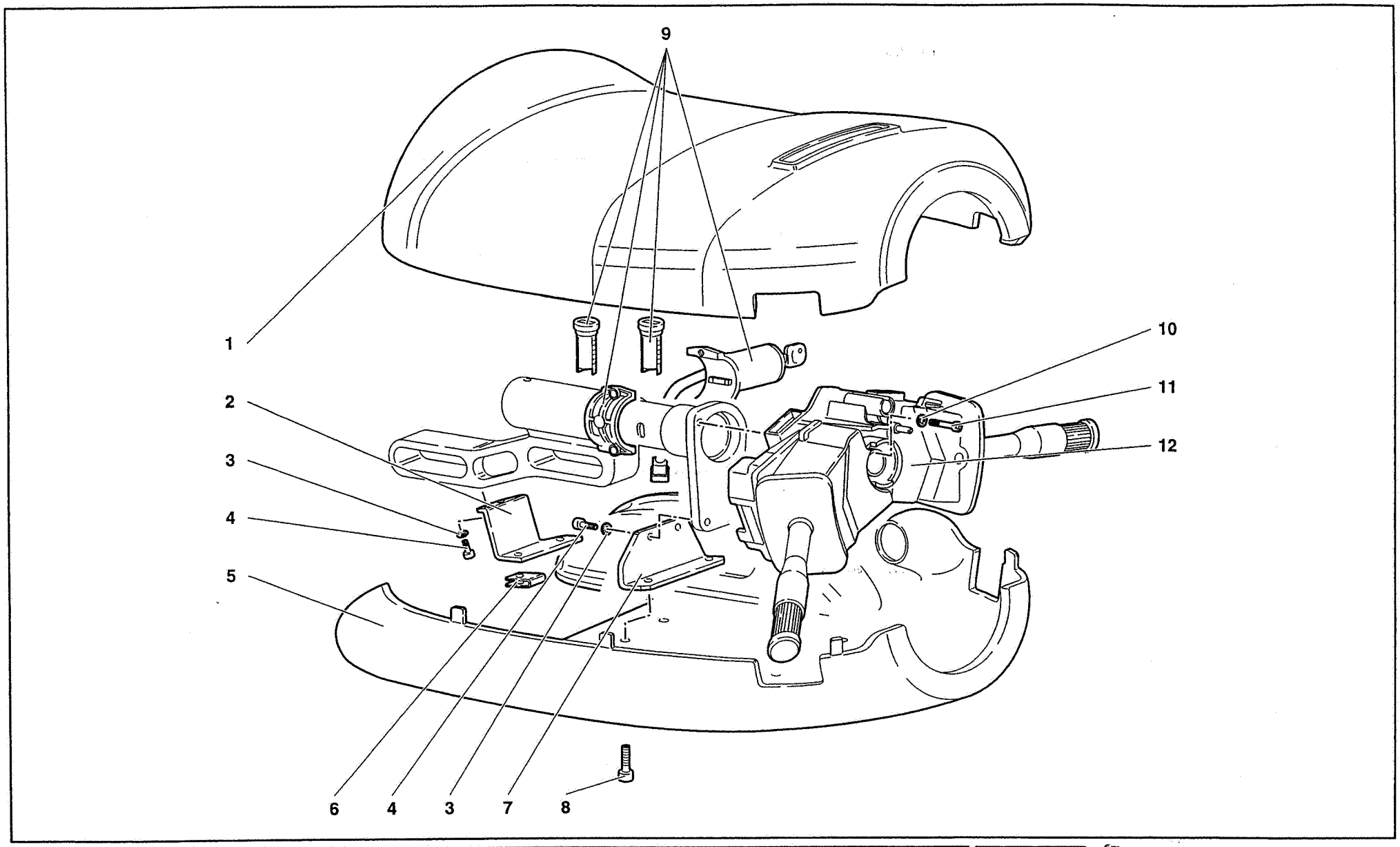
9
1
10
11
2
12
3
4
5
6
4
3
7
8

Rif. Ref. Réf. Bez. Ref.	Codice Part number Numero des pièces Teilnummer Codigo	Q.tà Q.ty Q.té Stk. C.dad	Versione Version Version Version Versión	DESCRIZIONE	DESCRIPTION	DESCRIPTION	BESCHREIBUNG	DESCRIPCION
1	009914311	1		RIVESTIMENTO SUP.	UPPER COVERING	REVETEMENT	VERKLEIDUNG	FORRO
2	0043001653	1		STAFFA	BRACKET	ETRIER	HALTER	SOPORTE
3	008400506	4		RONDELLA	WASHER	RONDELLE	SCHEIBE	ARANDELA
4	008700512	4		VITE	SCREW	VIS	SCHRAUBE	TORNILLO
5	009914312	1		RIVESTIMENTO INF.	LOWER COVERING	REVETEMENT	VERKLEIDUNG	FORRO
6	008220402	4		MOLLETTA	CLIP	AGRAFE	KLEMMSTUECK	SUJETADOR
7	0043001652	1		STAFFA	BRACKET	ETRIER	HALTER	SOPORTE
8	008700455	4		VITE	SCREW	VIS	SCHRAUBE	TORNILLO
9	006031202	1		KIT COMMUTATORE ACC.	SWITCH	COMMUTATEUR	SCHALTER	CONMUTADOR
10	008400502	2		RONDELLA	WASHER	RONDELLE	SCHEIBE	ARANDELA
11	008700547	2		VITE	SCREW	VIS	SCHRAUBE	TORNILLO
12	004338079	1		DEVIOLUCI	LIGHT CONTR. LEVER	LEVIER	HEBEL	PALANCA

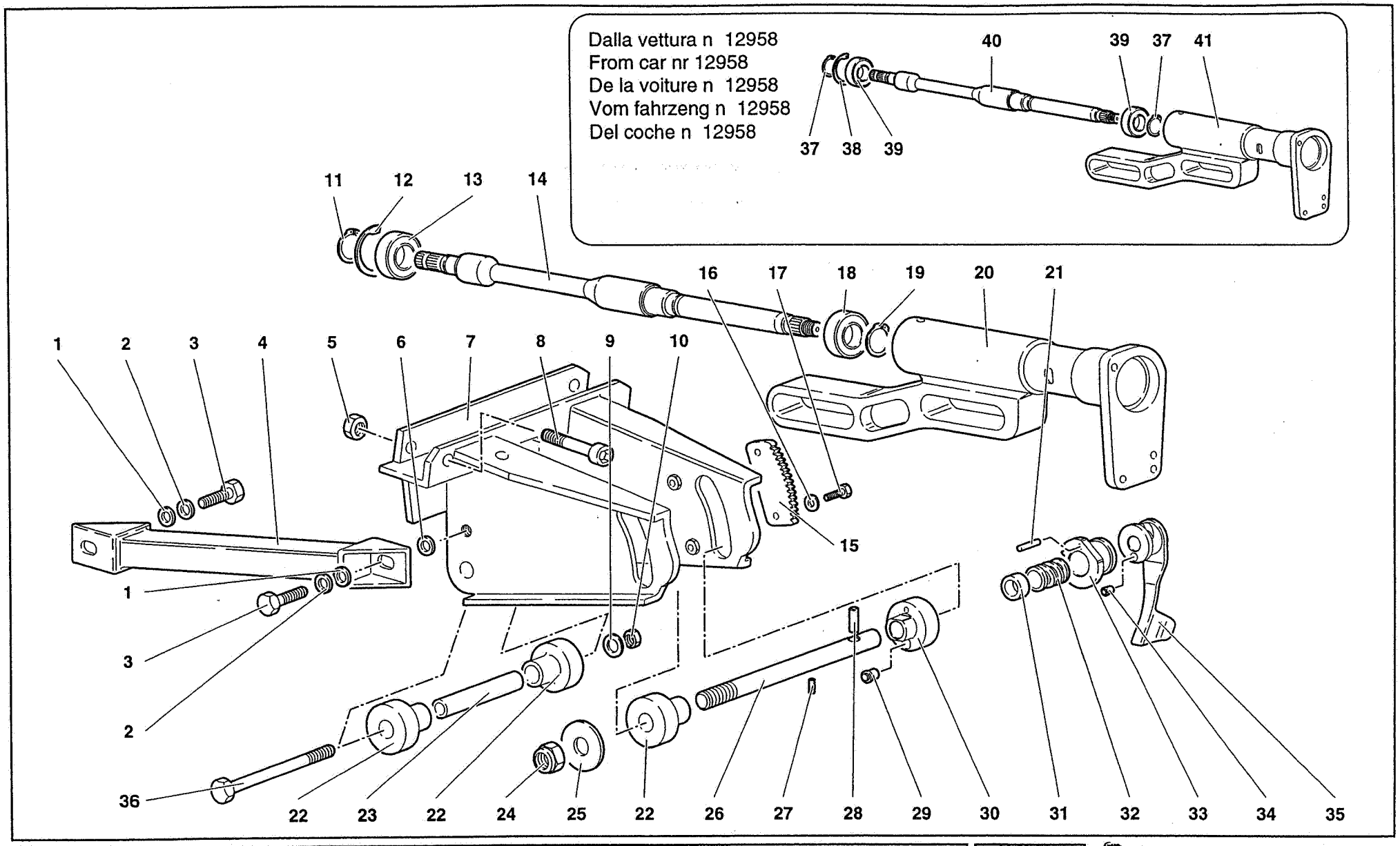

43	MY 98	STEERING DIRECTION	STERZO	LENKUNG DIRECCIÓN	43.02.00	Diablo SV 11/1998

Rif. Ref. Réf. Bez. Ref.	Codice Part number Numero des pièces Teilnummer Codigo	Q.tà Q.ty Q.té Stk. C.dad	Versione Version Version Version Versión	DESCRIZIONE	DESCRIPTION	DESCRIPTION	BESCHREIBUNG	DESCRIPCION
1	008400801	2		RONDELLA	WASHER	RONDELLE	SCHEIBE	ARANDELA
2	008410810	2		RONDELLA	WASHER	RONDELLE	SCHEIBE	ARANDELA
3	008100830	2		VITE	SCREW	VIS	SCHRAUBE	TORNILLO
4	004337924	1		PUNTONE	STRUT	ETAI	STREBE	TORNAPUNTA
5	008200824	2		DADO	NUT	ECROU	MUTTER	TUERCA
6	005133170			SPESSORE DI REGISTRO	SHIM	CALE D'EPAISSEUR	DISTANZSCHEIBE	SUPLEMENTO
7	004338286	1		SUPPORTO	SUPPORT	SUPPORT	LAGER	SOPORTE
7	004338285	1	74	SUPPORTO	SUPPORT	SUPPORT	LAGER	SOPORTE
8	008700830	2		VITE	SCREW	VIS	SCHRAUBE	TORNILLO
9	008410810	1		RONDELLA	WASHER	RONDELLE	SCHEIBE	ARANDELA
10	008200801	1		DADO	NUT	ECROU	MUTTER	TUERCA
11	008573501	1		ANELLO RITEGNO	RETAINER RING	ARRETOIR	HALTERING	RETENEDOR
12	008581501	1		ANELLO RITEGNO	RETAINER RING	ARRETOIR	HALTERING	RETENEDOR
13	008501703	1		CUSCINETTO	BEARING	ROULEMENT	LAGER	RODAMIENTO
14	004337937	1		ALBERINO	SMALL SHAFT	ARBRE	WELLE	ARBOL
15	004337941	1		RISCONTRO DENTATO	TOOTHED LOCK STRIK.	PLAQUE SERRURE	TURSCHLOSSPLATTE	PLACA
16	008400502	2		RONDELLA	WASHER	RONDELLE	SCHEIBE	ARANDELA
17	008700522	2		VITE	SCREW	VIS	SCHRAUBE	TORNILLO
18	008502011	1		CUSCINETTO	BEARING	ROULEMENT	LAGER	RODAMIENTO
19	008581801	1		ANELLO RITEGNO	RETAINER RING	ARRETOIR	HALTERING	RETENEDOR
20	004337938	1		SUPPORTO PIANTONE GUIDA	S. COLUMN SUPPORT	SUPPORT	LAGER	SOPORTE
21	004338318	1		SPINA	PIN	GOUPILLE	STIFT	PASADOR
22	004337939	3		DISTANZIALE	SPACER	ENTRETOISE	ABSTANDSTUECK	SEPARADOR
23	004337944	1		BOCCOLA	BUSHING	DOUILLE	BUECHSE	CASQUILLO
24	008201231	1		DADO	NUT	ECROU	MUTTER	TUERCA
25	005133169	1		RONDELLA	WASHER	RONDELLE	SCHEIBE	ARANDELA
26	004337942	1		PERNO	PIN	AXE	BOLZEN	EJE
27	008900408	1		SPINA	PIN	GOUPILLE	STIFT	PASADOR
28	004338065	1		SPINA	PIN	GOUPILLE	STIFT	PASADOR
29	004338060	1		SFERA DI POSIZIONE	POSITION BALL	BILLE	KUGEL	BOLA
30	004337946	1		DISTANZIALE	SPACER	ENTRETOISE	ABSTANDSTUECK	SEPARADOR
31	004337952	1		RONDELLA	WASHER	RONDELLE	SCHEIBE	ARANDELA
32	004337947	1		MOLLA	SPRING	RESSORT	FEDER	RESORTE
33	004337948	1		BICCHIERE DENTATO	TOOTHED BUCKET	POUSSOIR	BECHER	CUBETA
34	009907111	1		SFERA DI POSIZIONE	POSITION BALL	BILLE	KUGEL	BOLA
35	004338317	1		LEVA	LEVER	LEVIER	HEBEL	PALANCA
36	008100824	1		VITE	SCREW	VIS	SCHRAUBE	TORNILLO
37	008581801	2		ANELLO RITEGNO	RETAINER RING	ARRETOIR	HALTERING	RETENEDOR
38	008573701	1		ANELLO RITEGNO	RETAINER RING	ARRETOIR	HALTERING	RETENEDOR
39	008502011	2		CUSCINETTO	BEARING	ROULEMENT	LAGER	RODAMIENTO
40	0043002199	1		ALBERINO	SMALL SHAFT	ARBRE	WELLE	ARBOL
41	0043002200	1		SUPPORTO PIANTONE GUIDA	S. COLUMN SUPPORT	SUPPORT	LAGER	SOPORTE

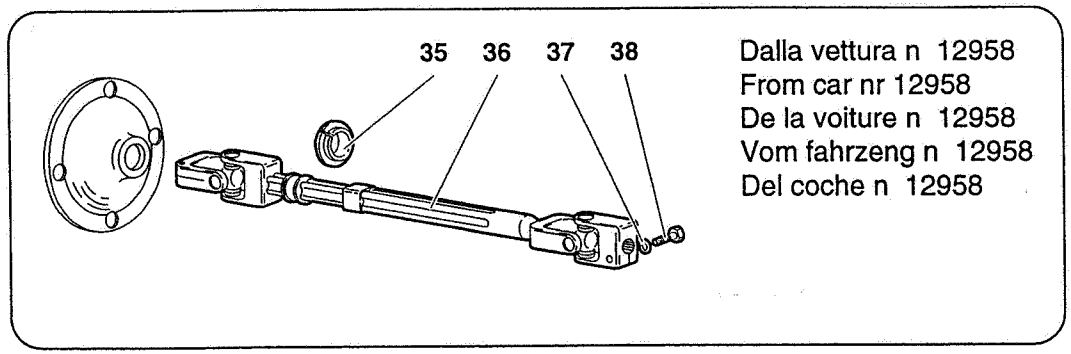

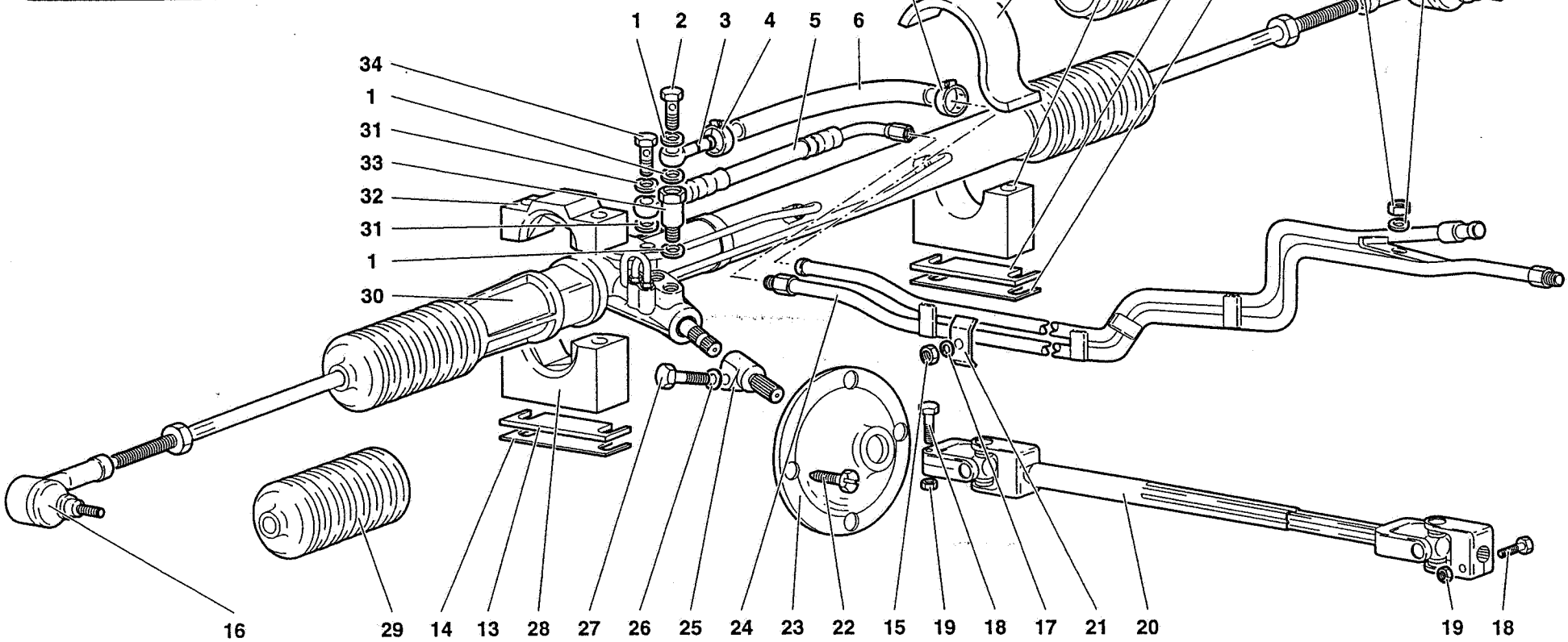

43	MY 98	STEERING DIRECTION	STERZO	LENKUNG DIRECCIÓN	43.03.00	Diablo SV 11/1998

Rif. Ref. Réf. Bez. Ref.	Codice Part number Numero des pièces Teilnummer Codigo	Q.tà Q.ty Q.té Stk. C.dad	Versione Version Version Version Versión	DESCRIZIONE	DESCRIPTION	DESCRIPTION	BESCHREIBUNG	DESCRIPCION
1	008401621	3		RONDELLA	WASHER	RONDELLE	SCHEIBE	ARANDELA
2	003101941	1		VITE FORATA	SCREW	VIS	SCHRAUBE	TORNILLO
3	004033471	1		RACCORDO	CONNECTION	RACCORD	STUTZEN	RACOR
4	008831320	2		FASCETTA	STRAP	COLLIER	HALTEBAND	ABRAZADERA
5	004033464	1		TUBO	PIPE	TUYAU	ROHR	TUBO
6	004033459	1		TUBO	PIPE	TUYAU	ROHR	TUBO
7	008101039	4		VITE	SCREW	VIS	SCHRAUBE	TORNILLO
8	008401007	4		RONDELLA	WASHER	RONDELLE	SCHEIBE	ARANDELA
9	004333518	1		CAVALLOTTO	RETAINER	ARRETOIR	KLEMMSTUECK	SUJETADOR
10	004331587	1		SPESSORE IN GOMMA	FLEX PAD	CALE ELASTIQUE	ELASTICHE UNTER.	SUPLEMENTO ELA.
11	004333655	1		SUPPORTO	SUPPORT	SUPPORT	LAGER	SOPORTE
12	004335023	1		CUFFIA	BOOT	CAPUCHON	MANSCHETTE	CAPUCHON
13	004333658			SPESSORE DI REGISTRO 1 MM	SHIM	CALE D'EPAISSEUR	DISTANZSCHEIBE	SUPLEMENTO
14	004333657			SPESSORE DI REGISTRO 0,5 MM	SHIM	CALE D'EPAISSEUR	DISTANZSCHEIBE	SUPLEMENTO
15	008200503	3		DADO	NUT	ECROU	MUTTER	TUERCA
16	004334555	2		TESTA GIUNTO SFERICO	COUPLING HEAD	JOINT A ROTULE	KUGELPFANNE	ARTICULACION DE
17	008400502	3		RONDELLA	WASHER	RONDELLE	SCHEIBE	ARANDELA
18	008100834	2		VITE	SCREW	VIS	SCHRAUBE	TORNILLO
19	008200809	2		DADO	NUT	ECROU	MUTTER	TUERCA
20	004329850	1		ALBERO SNODATO	JOINTED SHAFT	ARBRE ARTICULE	GELENKWELLE	ARBOL ARTICULADO
21	004033480	2		PIASTRINA	PLATE	PLAQUETTE	PLAETTCHEN	PLACA
22	008700673	4		VITE	SCREW	VIS	SCHRAUBE	TORNILLO
23	004330272	1		GUARNIZIONE	GASKET	GUARNITURE	DICHTUNG	GUARNIZIONE
24	004038062	1		TUBO	PIPE	TUYAU	ROHR	TUBO
25	004332458	1		CONNESSIONE	CONNECTION	CONNEXION	LEITUNG	CABLE
26	008410820	1		RONDELLA	WASHER	RONDELLE	SCHEIBE	ARANDELA
27	008100831	1		VITE	SCREW	VIS	SCHRAUBE	TORNILLO
28	004333656	1		SUPPORTO	SUPPORT	SUPPORT	LAGER	SOPORTE
29	004335023	1		CUFFIA	BOOT	CAPUCHON	MANSCHETTE	CAPUCHON
30	004333375	1		CREMAGLIERA SERVOASSISTITA	POWER STEERING	CREMAILLERE	ZAHNSTANGE	CREMALLERA
31	008401408	2		RONDELLA	WASHER	RONDELLE	SCHEIBE	ARANDELA
32	004331582	1		CAVALLOTTO	RETAINER	ARRETOIR	KLEMMSTUECK	SUJETADOR
33	004033458	1		RACCORDO	CONNECTION	RACCORD	STUTZEN	RACOR
34	005124347	1		RACCORDO	CONNECTION	RACCORD	STUTZEN	RACOR
35	0043002396	1		BOCCOLA	BUSHING	DOUILLE	BUECHSE	CASQUILLO
36	0043002198	1		ALBERO SNODATO	JOINTED SHAFT	ARBRE ARTICULE	GELENKWELLE	ARBOL ARTICULADO
37	008410823	2		RONDELLA	WASHER	RONDELLE	SCHEIBE	ARANDELA
38	008700843	2		VITE	SCREW	VIS	SCHRAUBE	TORNILLO

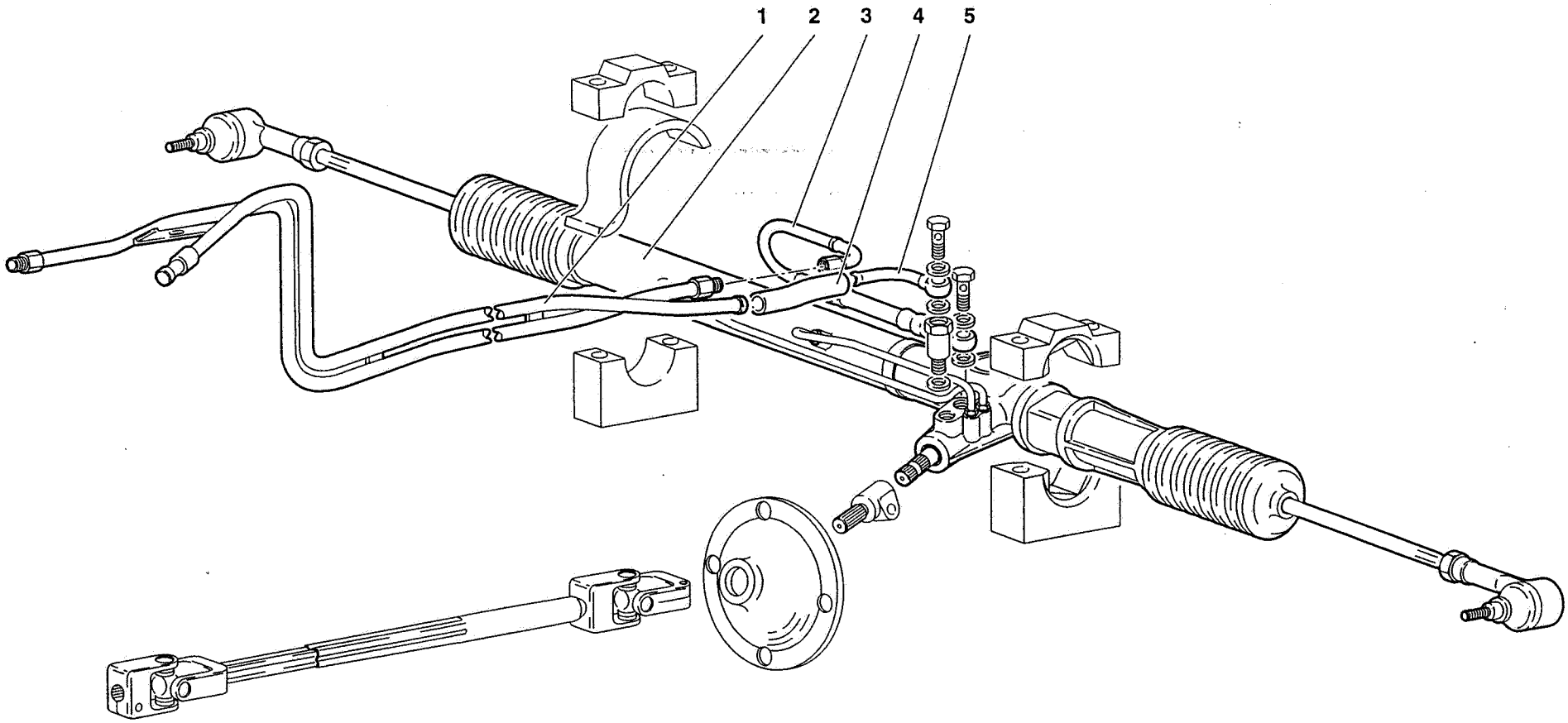
1
2
3
4
5

Rif. Ref. Réf. Bez. Ref.	Codice Part number Numero des pièces Teilnummer Codigo	Q.tà Q.ty Q.té Stk. C.dad	Versione Version Version Version Versión	DESCRIZIONE	DESCRIPTION	DESCRIPTION	BESCHREIBUNG	DESCRIPCION
1	004034605	1		TUBO	PIPE	TUYAU	ROHR	TUBO
2	004334602	1		CREMAGLIERA	POWER STEERING	CREMAILLERE	ZAHNSTANGE	CREMALLERA
3	004034328	1		TUBO	PIPE	TUYAU	ROHR	TUBO
4	004034603	1		TUBO	PIPE	TUYAU	ROHR	TUBO
5	004034604	1		RACCORDO	CONNECTION	RACCORD	STUTZEN	RACOR

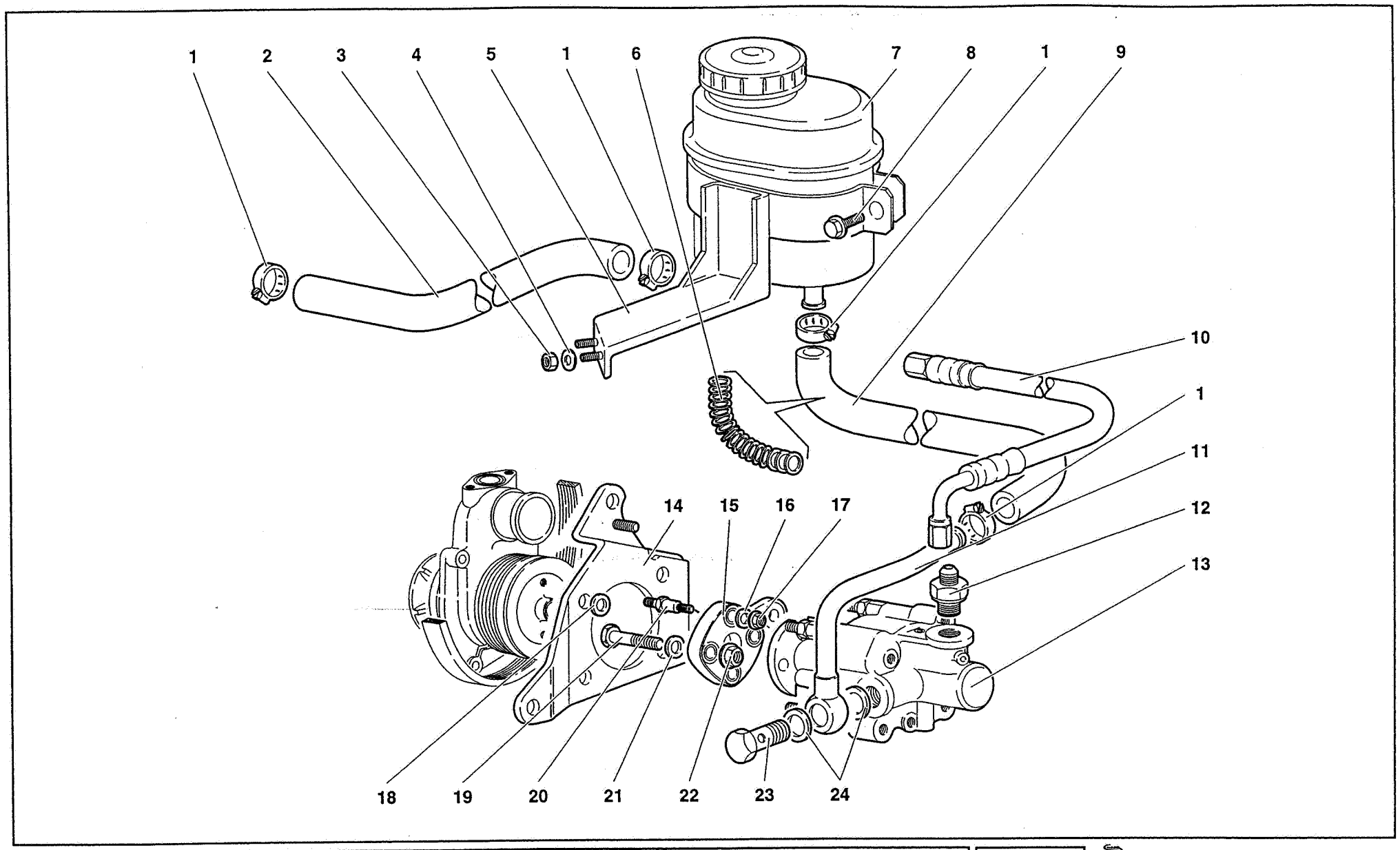
1
2
3
4
5
1
6
7
8
1
9
10
1
11
12
13
14
15
16
17
18
19
20
21
22
23
24

Rif. Ref. Réf. Bez. Ref.	Codice Part number Numero des pièces Teilnummer Codigo	Q.tà Q.ty Q.té Stk. C.dad	Versione Version Version Version Versión	DESCRIZIONE	DESCRIPTION	DESCRIPTION	BESCHREIBUNG	DESCRIPCION
1	008831524	4		FASCETTA	STRAP	COLLIER	HALTEBAND	ABRAZADERA
2	004033461	1		TUBO	PIPE	TUYAU	ROHR	TUBO
3	008200606	2		DADO	NUT	ECROU	MUTTER	TUERCA
4	008400606	2		RONDELLA	WASHER	RONDELLE	SCHEIBE	ARANDELA
5	004034058	1		SUPPORTO	SUPPORT	SUPPORT	LAGER	SOPORTE
6	004034563	1		MOLLA	SPRING	RESSORT	FEDER	RESORTE
7	004033456	1		SERBATOIO OLIO	OIL RESERVOIR	RESERVOIR D'HUILE	OELBEHAELTER	DEPOSITO DE ACEI.
8	008700663	1		VITE	SCREW	VIS	SCHRAUBE	TORNILLO
9	004033457	1		TUBO	PIPE	TUYAU	ROHR	TUBO
10	004033465	1		TUBO	PIPE	TUYAU	ROHR	TUBO
11	004033467	1		RACCORDO	CONNECTION	RACCORD	STUTZEN	RACOR ORIENTABLE
12	004033472	1		RACCORDO	CONNECTION	RACCORD	STUTZEN	RACOR ORIENTABLE
13	004036816	1		POMPA OLIO	OIL PUMP	POMPE A HUILE	OELPUMPE	BOMBA DE ACEITE
14	004037040	1		SUPPORTO	SUPPORT	SUPPORT	LAGER	SOPORTE
15	001737220	1		GIUNTO ELASTICO	FLEXIBLE JOINT	JOINT ELASTIQUE	ELAST.KUPPLUNG	JUNTA ELASTICA
16	008400506	2		RONDELLA	WASHER	RONDELLE	SCHEIBE	ARANDELA
17	008200503	2		DADO	NUT	ECROU	MUTTER	TUERCA
18	008400816	4		RONDELLA	WASHER	RONDELLE	SCHEIBE	ARANDELA
19	004037039	2		VITE	SCREW	VIS	SCHRAUBE	TORNILLO
20	001737044	2		PERNO	PIN	AXE	BOLZEN	EJE
21	008400816	2		RONDELLA	WASHER	RONDELLE	SCHEIBE	ARANDELA
22	008200826	2		DADO	NUT	ECROU	MUTTER	TUERCA
23	004009760	1		VITE FORATA	SCREW	VIS	SCHRAUBE	TORNILLO
24	008401819	2		RONDELLA	WASHER	RONDELLE	SCHEIBE	ARANDELA

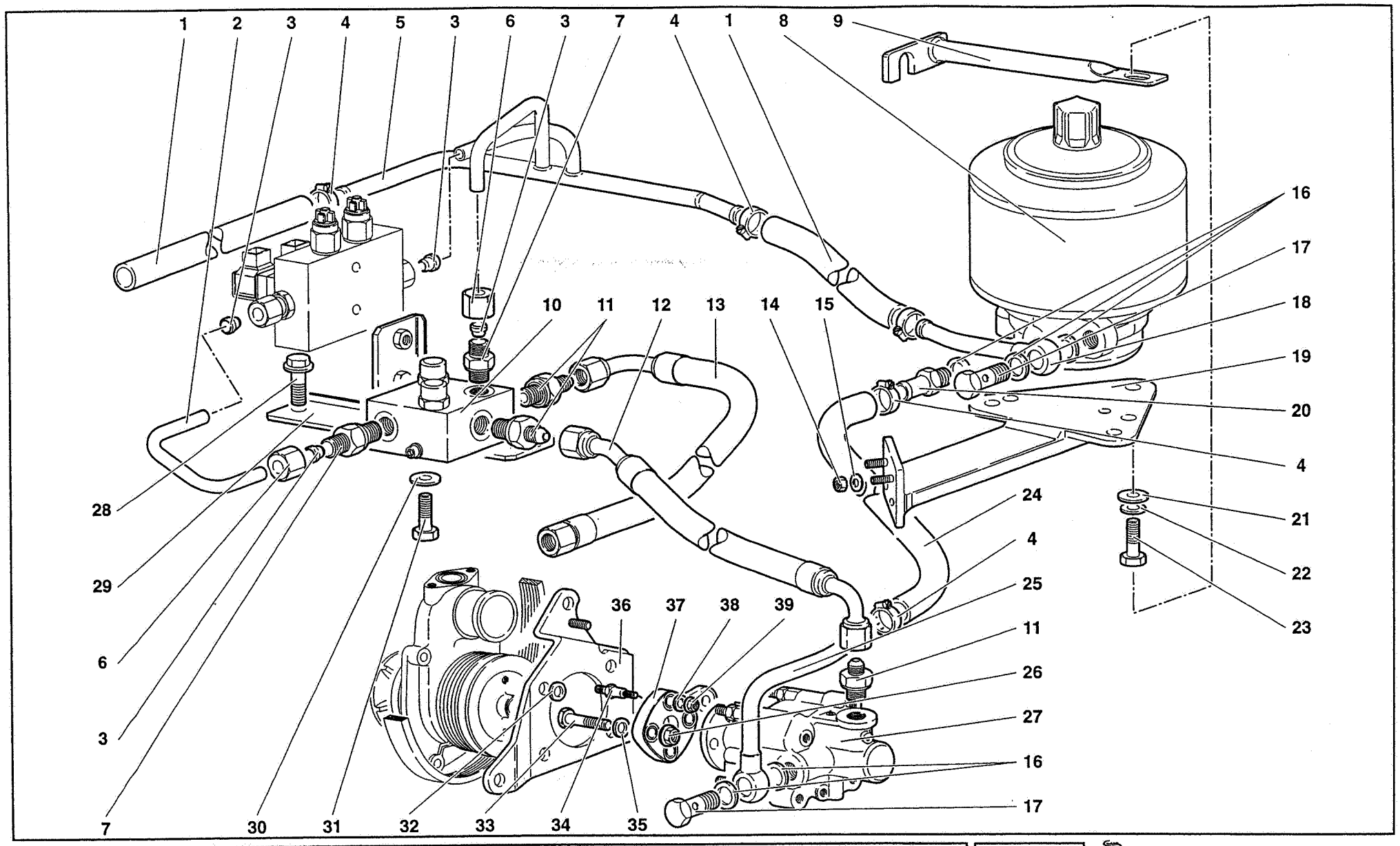

43	MY 98	STEERING DIRECTION	STERZO (Ver. CP)	LENKUNG DIRECCIÓN	43.04.00	Diablo SV 11/1998

Rif. Ref. Réf. Bez. Ref.	Codice Part number Numero des pièces Teilnummer Codigo	Q.tà Q.ty Q.té Stk. C.dad	Versione Version Version Version Versión	DESCRIZIONE	DESCRIPTION	DESCRIPTION	BESCHREIBUNG	DESCRIPCION
1	004034577		2	TUBO	PIPE	TUYAU	ROHR	TUBO
2	005134578		1	TUBAZIONE RIGIDA	RIGID PIPE	TUYAU	LEITUNG	TUBO
3	004036492		4	BUSSOLA	BUSHING	DOUILLE	GEWINDEBUECHSE	CASQUILLO
4	008831524		6	FASCETTA	STRAP	COLLIER	HALTEBAND	ABRAZADERA
5	005134584		1	TUBAZIONE RIGIDA	RIGID PIPE	TUYAU	LEITUNG	TUBO
6	004036493		2	DADO	NUT	ECROU	MUTTER	TUERCA
7	004036490		2	RACCORDO	CONNECTION	RACCORD	STUTZEN	RACOR
8	004037387		1	SERBATOIO	W/W RESERVOIR	RESERVOIR	BEHAELTER	DEPOSITO
9	004036796		1	STAFFA	BRACKET	ETRIER	HALTER	SOPORTE
10	004034570		1	VALVOLA	VALVE	SOUPAPE	VENTIL	VALVULA
11	004033472		3	RACCORDO	CONNECTION	RACCORD	STUTZEN	RACOR
12	004034576		1	TUBO	PIPE	TUYAU	ROHR	TUBO
13	004034582		1	TUBO	PIPE	TUYAU	ROHR	TUBO
14	008200606		2	DADO	NUT	ECROU	MUTTER	TUERCA
15	008400607		2	RONDELLA	WASHER	RONDELLE	SCHEIBE	ARANDELA
16	008401819		5	RONDELLA	WASHER	RONDELLE	SCHEIBE	ARANDELA
17	004009760		2	VITE FORATA	SCREW	VIS	SCHRAUBE	TORNILLO
18	004036521		1	RACCORDO	CONNECTION	RACCORD	STUTZEN	RACOR
19	004036489		1	SUPPORTO	SUPPORT	SUPPORT	LAGER	SOPORTE
20	004036491		1	RACCORDO	CONNECTION	RACCORD	STUTZEN	RACOR
21	008400801		3	RONDELLA	WASHER	RONDELLE	SCHEIBE	ARANDELA
22	008410819		3	RONDELLA	WASHER	RONDELLE	SCHEIBE	ARANDELA
23	008100812		3	VITE	SCREW	VIS	SCHRAUBE	TORNILLO
24	004033457		1	TUBO	PIPE	TUYAU	ROHR	TUBO
25	004033467		1	RACCORDO	CONNECTION	RACCORD	STUTZEN	RACOR
26	008200826		2	DADO	NUT	ECROU	MUTTER	TUERCA
27	004036816		1	POMPA OLIO	OIL PUMP	POMPE A HUILE	OELPUMPE	BOMBA DE ACEITE
28	008700660		1	VITE	SCREW	VIS	SCHRAUBE	TORNILLO
29	004036494		1	SUPPORTO	SUPPORT	SUPPORT	LAGER	SOPORTE
30	008400607		2	RONDELLA	WASHER	RONDELLE	SCHEIBE	ARANDELA
31	008100613		2	VITE	SCREW	VIS	SCHRAUBE	TORNILLO
32	008400816		4	RONDELLA	WASHER	RONDELLE	SCHEIBE	ARANDELA
33	004037039		2	VITE	SCREW	VIS	SCHRAUBE	TORNILLO
34	001737044		2	PERNO	PIN	AXE	BOLZEN	EJE
35	008400816		2	RONDELLA	WASHER	RONDELLE	SCHEIBE	ARANDELA
36	004037040		1	SUPPORTO	SUPPORT	SUPPORT	LAGER	SOPORTE
37	001737220		1	GIUNTO ELASTICO	FLEXIBLE JOINT	JOINT ELASTIQUE	ELAST.KUPPLUNG	JUNTA ELASTICA
38	008400506		2	RONDELLA	WASHER	RONDELLE	SCHEIBE	ARANDELA
39	008200503		2	DADO	NUT	ECROU	MUTTER	TUERCA

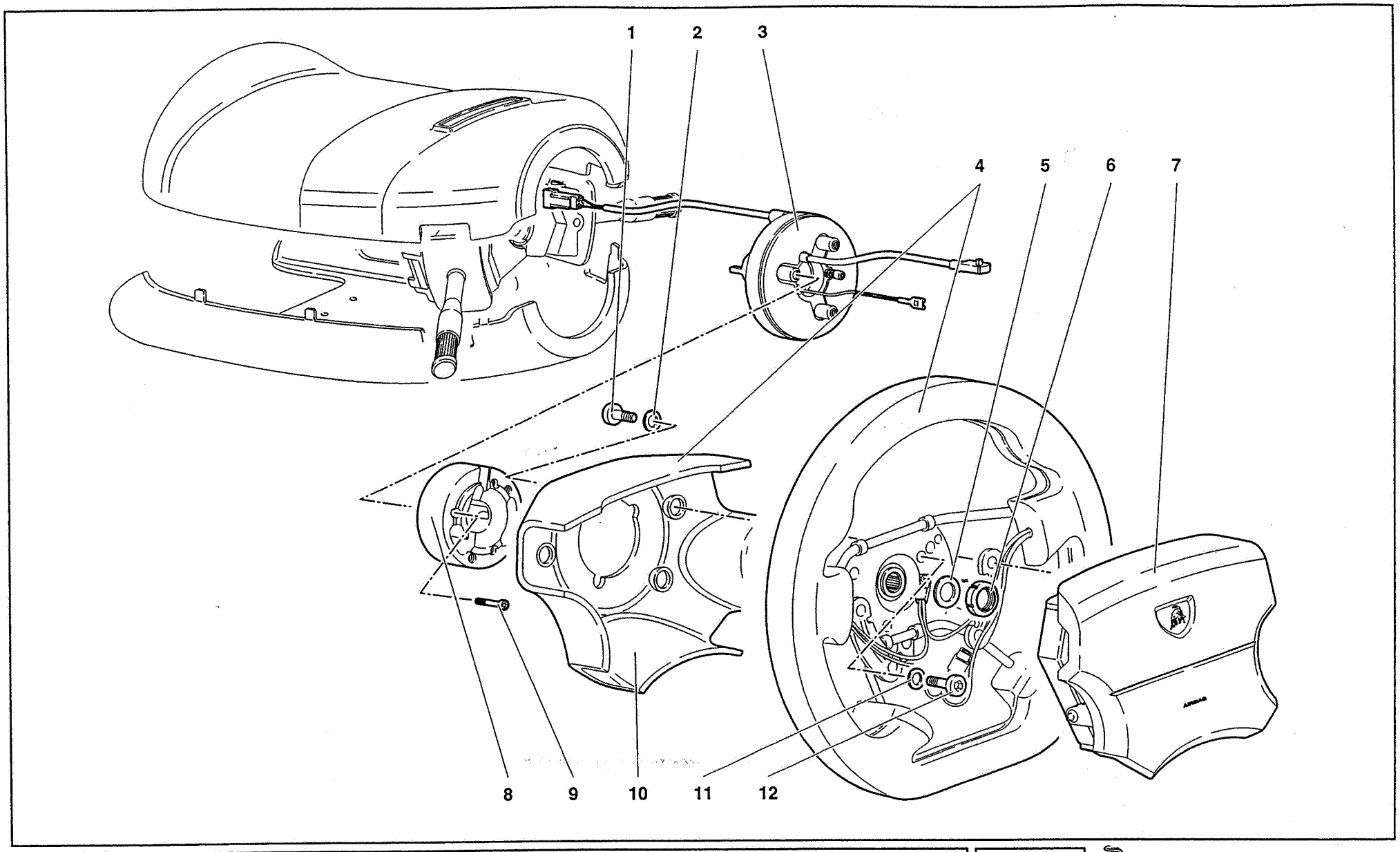
1
2
3
4
5
6
7
8
9
10
11
12

Rif. Ref. Réf. Bez. Ref.	Codice Part number Numero des pièces Teilnummer Codigo	Q.tà Q.ty Q.té Stk. C.dad	Versione Version Version Version Versión	DESCRIZIONE	DESCRIPTION	DESCRIPTION	BESCHREIBUNG	DESCRIPCION
1	008700644	4		VITE	SCREW	VIS	SCHRAUBE	TORNILLO
2	008410602	4		RONDELLA	WASHER	RONDELLE	SCHEIBE	ARANDELA
3	0043000872	1		CONTATTO SPIRALATO	CONT. (SPIRAL COIL)	CONTACT	KONTAKT	CONTACTO
4	004337913	1		VOLANTE	STEERING WHEEL	VOLANT DE DIREC.	LENKRAD	VOLANTE DE DIREC.
5	008401417	1		RONDELLA	WASHER	RONDELLE	SCHEIBE	ARANDELA
6	008251501	1		GHIERA	PLUG	VIROLE	GEWINDERING	VIROLA
7	004337912	1		MODULO AIRBAG	AIRBAG MODULE	AIRBAG	AIRBAG	AIRBAG
8	004337936	1		DISTANZIALE	SPACER	ENTRETOISE	ABSTANDSTUECK	SEPARADOR
9	008700430	3		VITE	SCREW	VIS	SCHRAUBE	TORNILLO
10	004337914	1		COPERCHIO	COVER	COUVERCLE	DECKEL	TAPA
11	008410820	2		RONDELLA	WASHER	RONDELLE	SCHEIBE	ARANDELA
12	008700847	2		VITE	SCREW	VIS	SCHRAUBE	TORNILLO

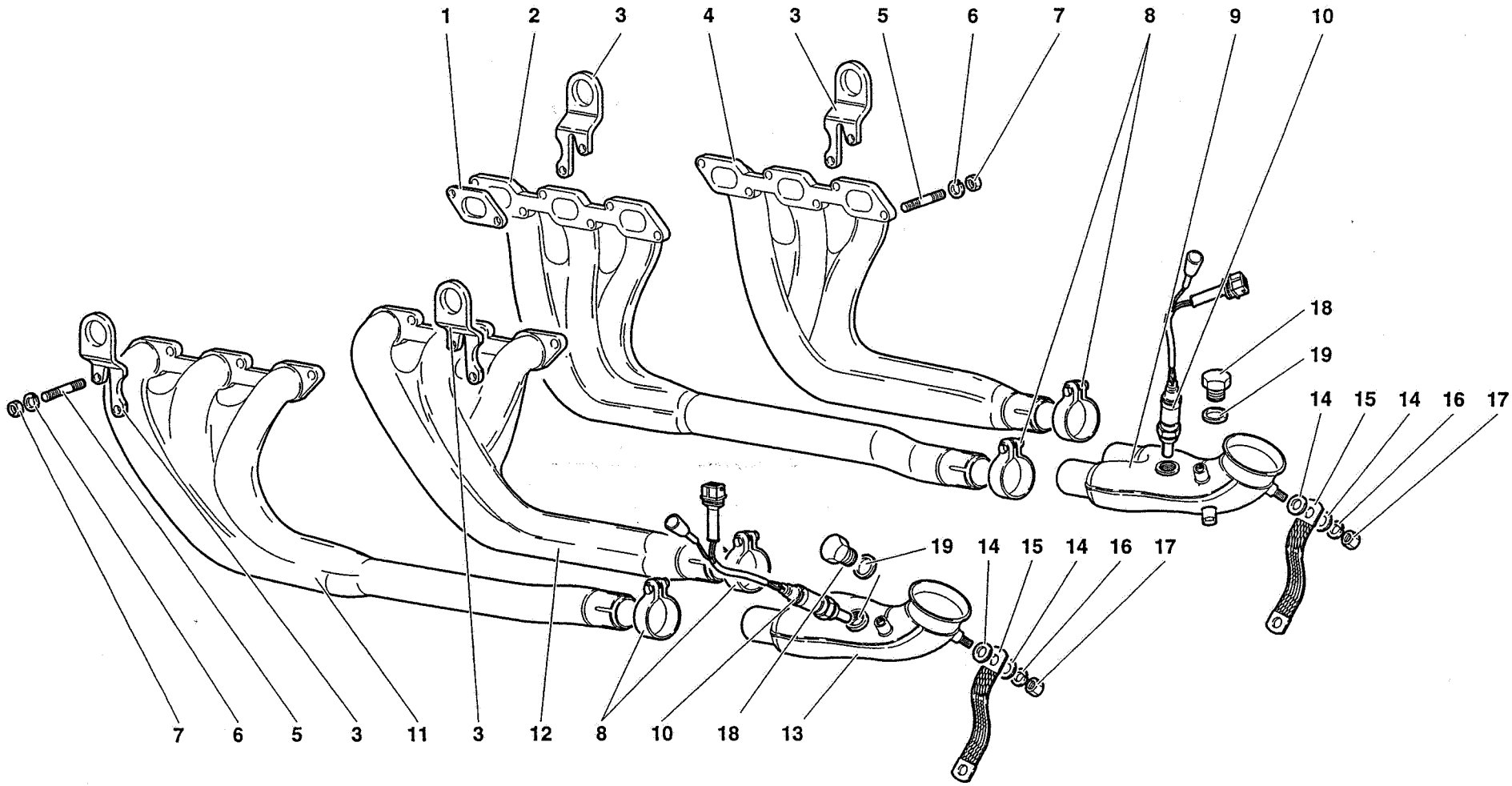

44	MY 98	EXHAUST SYSTEM SYSTEME D'ECHAPPEMENT	IMPIANTO DI SCARICO	AUSPUFFANLAGE INSTALACIÓN DE EVACUACIÓN	44.01.00	Diablo SV 11/1998

Rif. Ref. Réf. Bez. Ref.	Codice Part number Numero des pièces Teilnummer Codigo	Q.tà Q.ty Q.té Stk. C.dad	Versione Version Version Version Versión	DESCRIZIONE	DESCRIPTION	DESCRIPTION	BESCHREIBUNG	DESCRIPCION
1	001121245	12		GUARNIZIONE	GASKET	GUARNITURE	DICHTUNG	GUARNIZIONE
2	004427530	1		COLLETTORE ANT. DX	FRONT EXHAUST MAN.	COLLECTEUR D'ECHA.	AUSLASSKRUMMER	COLECTOR DE ESC.
3	004432438	4		GANCIO	HOOK	CROCHET	HAKEN	GANCHO
4	004427529	1		COLLETTORE POST. DX	REAR EXHAUST MAN.	COLLECTEUR D'ECHA.	AUSLASSKRUMMER	COLECTOR DE ESC.
5	008300809	24		PRIGIONIERO	STUD	GOUJON	STIFTSCHRAUBE	ESPARRAGO
6	008410817	24		RONDELLA	WASHER	RONDELLE	SCHEIBE	ARANDELA
7	008240808	24		DADO	NUT	ECROU	MUTTER	TUERCA
8	008835002	4		FASCETTA	STRAP	COLLIER	HALTEBAND	ABRAZADERA
9	0044001238	1		COLLETTORE A TRE VIE DX	EXHAUST MANIFOLD	COLLECTEUR D'ECHA.	AUSLASSKRUMMER	COLECTOR DE ESC.
10	004429307	2		SENSORE DI OSSIGENO	OXIGEN SENSOR	SENSEUR	GEBER	SENSOR
11	004427528	1		COLLETTORE ANT. SX	FRO. L. EXHAUST MAN.	COLLECTEUR D'ECHA.	AUSLASSKRUMMER	COLECTOR DE ESC.
12	004427527	1		COLLETTORE POST. SX	REAR L EXHAUST MAN.	COLLECTEUR D'ECHA.	AUSLASSKRUMMER	COLECTOR DE ESC.
13	0044001236	1		COLLETTORE A TRE VIE SX	EXHAUST MANIFOLD	COLLECTEUR D'ECHA.	AUSLASSKRUMMER	COLECTOR DE ESC.
14	008400806	4		RONDELLA	WASHER	RONDELLE	SCHEIBE	ARANDELA
15	001604328	2		CAVO MASSA	GROUND CABLE	FIL DE MASSEMASSEK	ABEL	CABLE DE MASA
16	008410806	2		RONDELLA	WASHER	RONDELLE	SCHEIBE	ARANDELA
17	008200808	2		DADO	NUT	ECROU	MUTTER	TUERCA
18	004431147	2	80	TAPPO	PLUG	BOUCHON	STOPFEN	TAPON
18	004431147	2	88	TAPPO	PLUG	BOUCHON	STOPFEN	TAPON
18	004431147	2	89	TAPPO	PLUG	BOUCHON	STOPFEN	TAPON
19	008401819	2	80	RONDELLA	WASHER	RONDELLE	SCHEIBE	ARANDELA
19	008401819	2	88	RONDELLA	WASHER	RONDELLE	SCHEIBE	ARANDELA
19	008401819	2	89	RONDELLA	WASHER	RONDELLE	SCHEIBE	ARANDELA

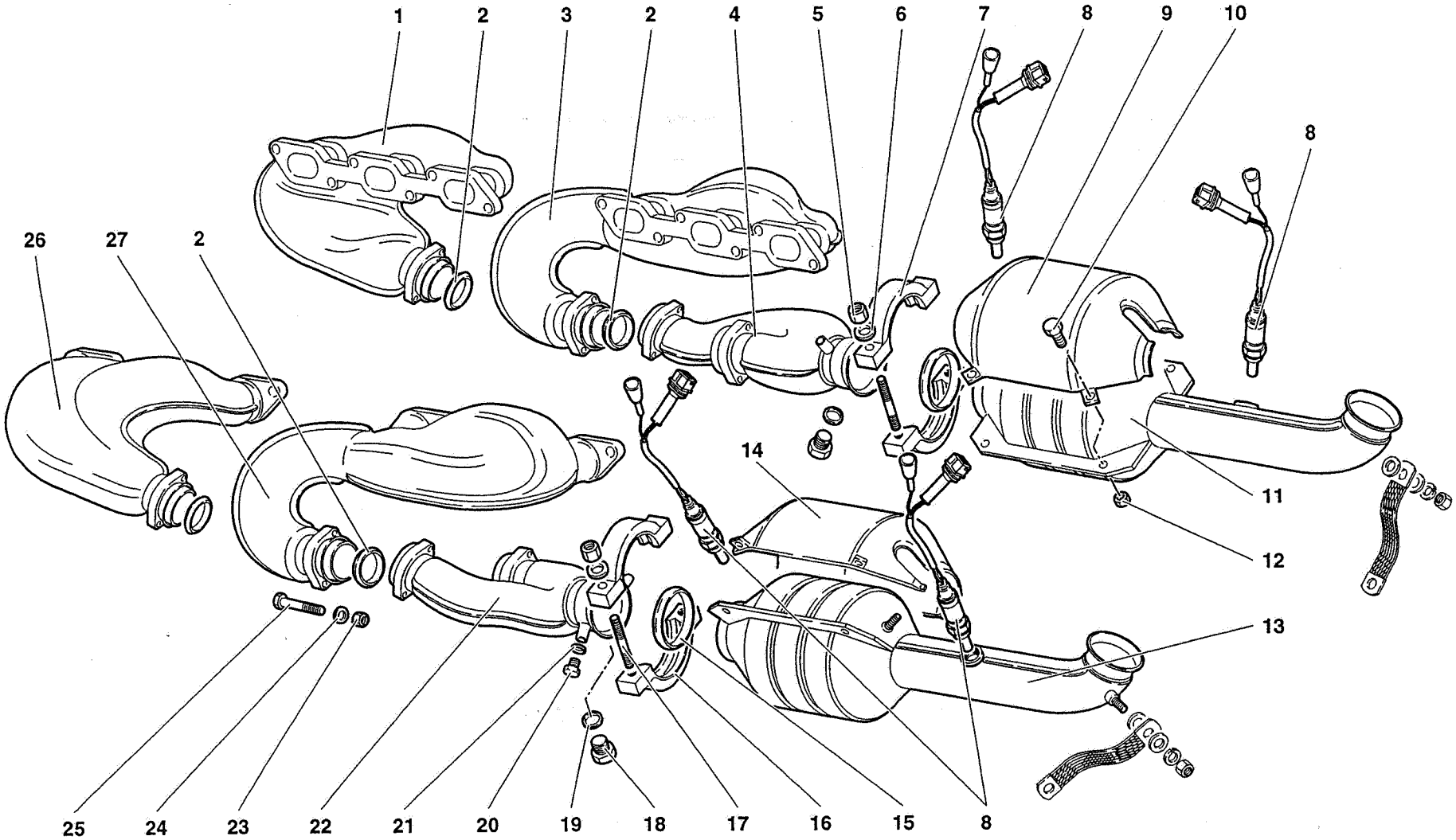

44	MY 98	EXHAUST SYSTEM SYSTEME D'ECHAPPEMENT	IMPIANTO DI SCARICO (Ver. 71, 96)	AUSPUFFANLAGE INSTALACIÓN DE EVACUACIÓN	44.01.00	Diablo SV 11/1998

Rif. Ref. Réf. Bez. Ref.	Codice Part number Numero des pièces Teilnummer Codigo	Q.tà Q.ty Q.té Stk. C.dad	Versione Version Version Version Versión	DESCRIZIONE	DESCRIPTION	DESCRIPTION	BESCHREIBUNG	DESCRIPCION
1	004435456	1		COLLETTORE DI SCARICO ANT. DX	EXHAUST MANIFOLD	COLLECT. D'ECHAP.	AUSLASSKRUMMER	COLECTOR DE ESCA.
2	004435972	4		ANELLO DOPPIO CONO	BI-CONE RING	BI-CONE	DICHTKEGEL	ANILLO BICONICO
3	004435457	1		COLLETTORE DI SCARICO POST.DX	EXHAUST MANIFOLD	COLLECT. D'ECHAP.	AUSLASSKRUMMER	COLECTOR DE ESCA.
4	0044001748	1		COLLETTORE A TRE VIE DX	EXHAUST MANIFOLD	COLLECT. D'ECHAP.	AUSLASSKRUMMER	COLECTOR DE ESCA.
5	008200825	4		DADO	NUT	ECROU	MUTTER	TUERCA
6	008440806	4		RONDELLA	WASHER	RONDELLE	SCHEIBE	ARANDELA
7	004424068	2		SEMIANELLO	HALF RING	DEMI-BAGUE	RINGHAELFTE	SEMIANILLO
8	004429307	4		SENSORE DI OSSIGENO	OXIGEN SENSOR	SENSEUR	GEBER	SENSOR
9	004435463	1		PROTEZIONE	SHIELD	PROTECTION	ABDECKUNG	DEFENSA
10	008700512	8		VITE	SCREW	VIS	SCHRAUBE	TORNILLO
11	004436743	1		CONVERTITORE CATALITICO DX	RIGHT CAT. CONVE.	CONVERTISSEUR CAT.	KATALYSATOR	CONVER.CATALITICO
12	008200513	8		DADO	NUT	ECROU	MUTTER	TUERCA
13	004436744	1		CONVERTITORE CATALITICO SX	LEFT CAT. CONVE.	CONVERTISSEUR CAT.	KATALYSATOR	CONVER.CATALITICO
14	004435971	1		PROTEZIONE	SHIELD	PROTECTION	ABDECKUNG	DEFENSA
15	004424070	2		ANELLO DOPPIO CONO	BI-CONE RING	BI-CONE	DICHTKEGEL	ANILLO BICONICO
16	004424067	2		SEMIANELLO	HALF RING	DEMI-BAGUE	RINGHAELFTE	SEMIANILLO
17	008300903	4		PRIGIONIERO	STUD	GOUJON	STIFTSCHRAUBE	ESPARRAGO
18	008931808	2		TAPPO	PLUG	BOUCHON	STOPFEN	TAPON
19	008401819	2		RONDELLA	WASHER	RONDELLE	SCHEIBE	ARANDELA
20	004431148	2		TAPPO	PLUG	BOUCHON	STOPFEN	TAPON
21	008401008	2		RONDELLA	WASHER	RONDELLE	SCHEIBE	ARANDELA
22	0044001747	1		COLLETTORE A TRE VIE SX	EXHAUST MANIFOLD	COLLECT. D'ECHAP.	AUSLASSKRUMMER	COLECTOR DE ESCA.
23	008200825	8		DADO	NUT	ECROU	MUTTER	TUERCA
24	008440806	8		RONDELLA	WASHER	RONDELLE	SCHEIBE	ARANDELA
25	008100870	8		VITE	SCREW	VIS	SCHRAUBE	TORNILLO
26	004435458	1		COLLETTORE DI SCARICO ANT. SX	EXHAUST MANIFOLD	COLLECT. D'ECHAP.	AUSLASSKRUMMER	COLECTOR DE ESCA.
27	004435459	1		COLLETTORE DI SCARICO POST.SX	EXHAUST MANIFOLD	COLLECT. D'ECHAP.	AUSLASSKRUMMER	COLECTOR DE ESCA.

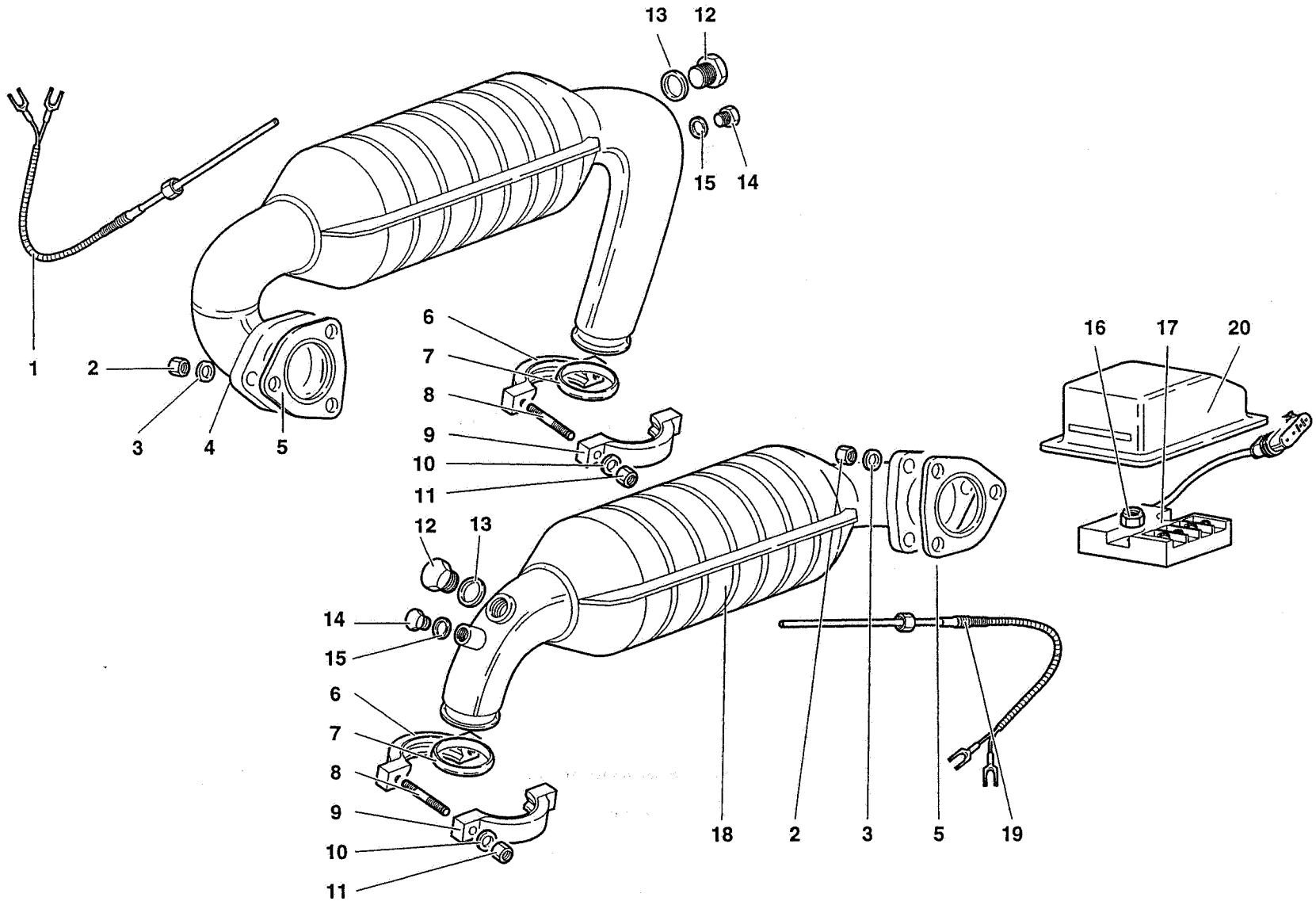

44	MY 98	EXHAUST SYSTEM SYSTEME D'ECHAPPEMENT	IMPIANTO DI SCARICO	AUSPUFFANLAGE INSTALACIÓN DE EVACUACIÓN	44.02.00	Diablo SV 11/1998

Rif. Ref. Réf. Bez. Ref.	Codice Part number Numero des pièces Teilnummer Codigo	Q.tà Q.ty Q.té Stk. C.dad	Versione Version Version Version Versión	DESCRIZIONE	DESCRIPTION	DESCRIPTION	BESCHREIBUNG	DESCRIPCION
1	006033686	1		TERMOCOPPIA (L=1450 MM)	THERMOCOUPLE	THERMOCOUPLE	THERMOELEMENT	PAR TERMICO
2	008200825	6		DADO	NUT	ECROU	MUTTER	TUERCA
3	008440806	6		RONDELLA	WASHER	RONDELLE	SCHEIBE	ARANDELA
4	0044003565	1		ASSIEME CONVERT.CAT. DX	RIGHT CATAL. CON.	CONVERTISSEUR CAT.	KATALYSATOR	CONVER. CATALIT.
5	004432145	2		GUARNIZIONE	GASKET	GUARNITURE	DICHTUNG	GUARNIZIONE
6	004424067	2		SEMIANELLO FILETTATO	HALF RING	DEMI-BAGUE	RINGHAELFTE	SEMIANILLO
7	004424070	2		ANELLO DOPPIO CONO	BI-CONE RING	BI-CONE	DICHTKEGEL	ANILLO BICONICO
8	008300903	4		PRIGIONIERO	STUD	GOUJON	STIFTSCHRAUBE	ESPARRAGO
9	004424068	2		SEMIANELLO	HALF RING	DEMI-BAGUE	RINGHAELFTE	SEMIANILLO
10	008440806	4		RONDELLA	WASHER	RONDELLE	SCHEIBE	ARANDELA
11	008200825	4		DADO	NUT	ECROU	MUTTER	TUERCA
12	004431147	2		TAPPO	PLUG	BOUCHON	STOPFEN	TAPON
13	008401819	2		RONDELLA	WASHER	RONDELLE	SCHEIBE	ARANDELA
14	004431148	2		TAPPO	PLUG	BOUCHON	STOPFEN	TAPON
15	008401024	2		RONDELLA	WASHER	RONDELLE	SCHEIBE	ARANDELA
16	008200406	2		DADO	NUT	ECROU	MUTTER	TUERCA
17	006033680	1		GIUNTO FREDDO CATALYST	COLD JOINT	JOINT FROID	KALTERANSCHLUSS	JUNTA FRÍA
18	0044003566	1		ASSIEME CONVERT. CAT. SX	LEFT CATALYTIC CON.	CONVERTISSEUR CAT.	KATALYSATOR	CONVER. CATALIT.
19	006033687	1		TERMOCOPPIA (L=640 MM)	THERMOCOUPLE	THERMOCOUPLE	THERMOELEMENT	PAR TERMICO
20	005934453	1		PROTEZIONE	SHIELD	PROTECTION	ABDECKUNG	DEFENSA

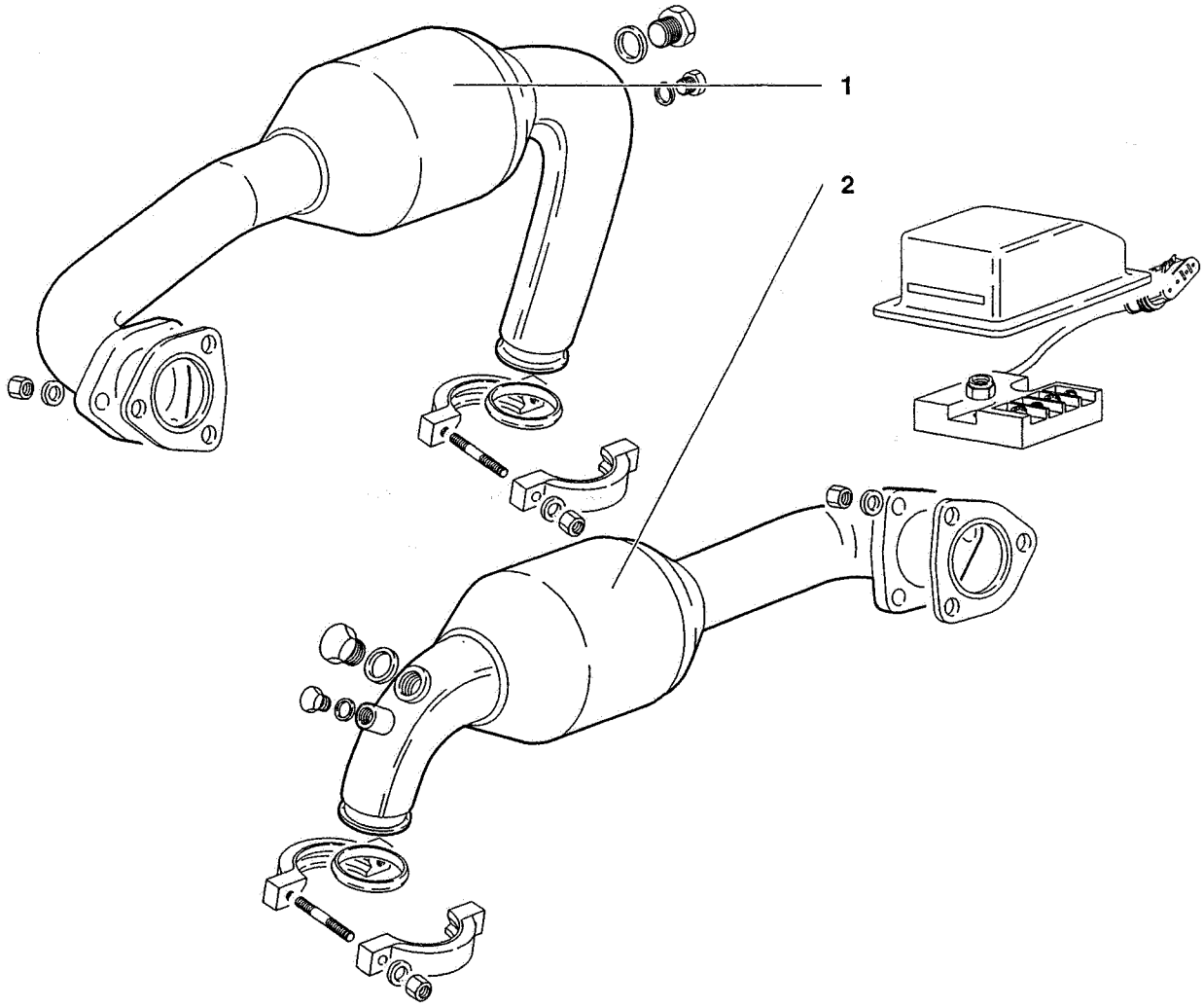
1
2

Rif. Ref. Réf. Bez. Ref.	Codice Part number Numero des pièces Teilnummer Codigo	Q.tà Q.ty Q.té Stk. C.dad	Versione Version Version Version Versión	DESCRIZIONE	DESCRIPTION	DESCRIPTION	BESCHREIBUNG	DESCRIPCION
1	004435461	1		CONVERT. CATALITICO POST. DX	CATALYTIC CONVER.	CONVERTIS. CATALY.	KATALYSATOR	CONVERTI. CATALITI.
2	004435462	1		CONVERT. CATALITICO POST. SX	CATALYTIC CONVER.	CONVERTIS. CATALY.	KATALYSATOR	CONVERTI. CATALITI.

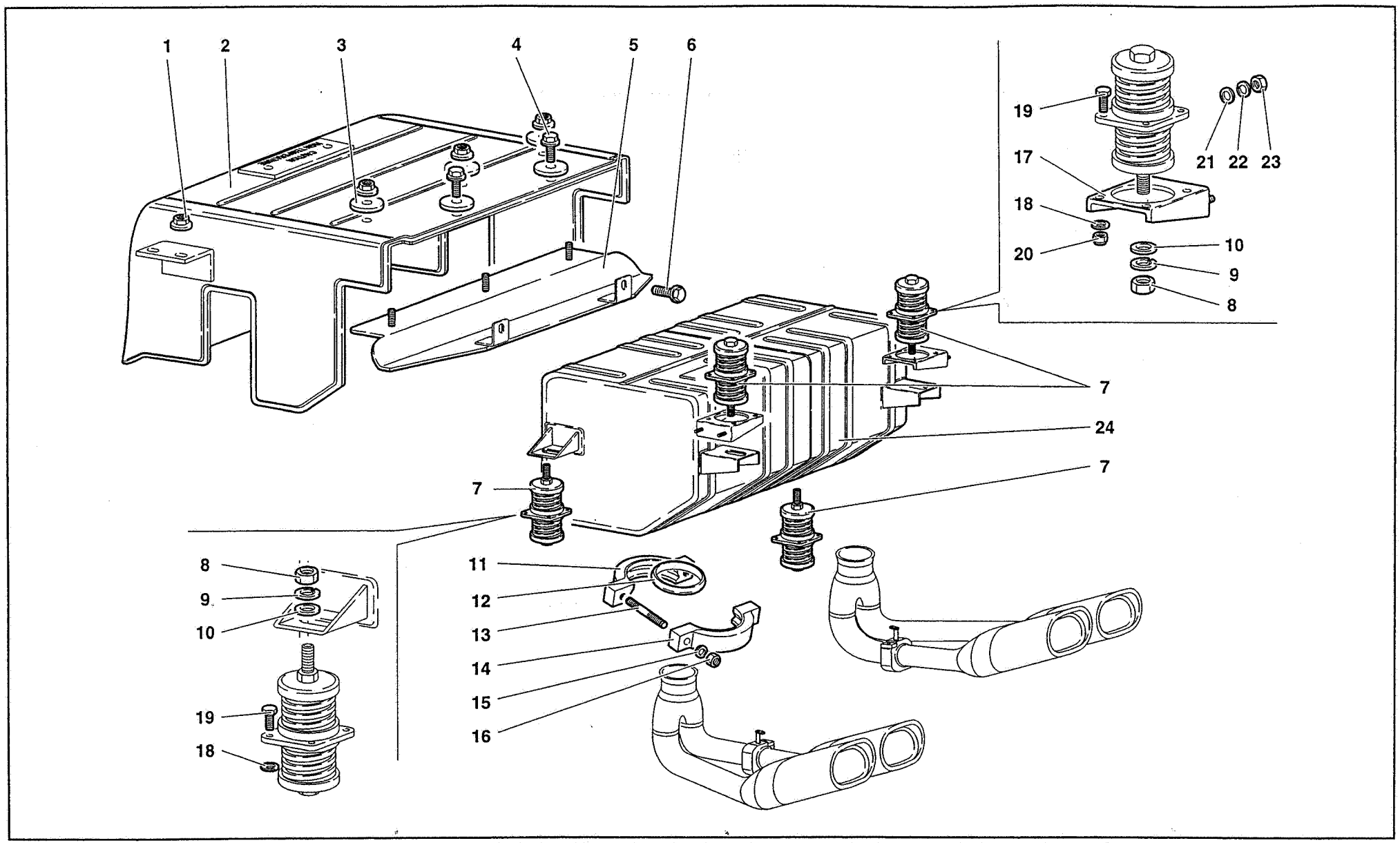
1
2
3
4
5
6
19
17
18
20
21
22
23
10
9
8
7
24
7
7
8
9
10
19
18
11
12
13
14
15
16

Rif. Ref. Réf. Bez. Ref.	Codice Part number Numero des pièces Teilnummer Codigo	Q.tà Q.ty Q.té Stk. C.dad	Versione Version Version Version Versión	DESCRIZIONE	DESCRIPTION	DESCRIPTION	BESCHREIBUNG	DESCRIPCION
1	008200614	7		DADO	NUT	ECROU	MUTTER	TUERCA
2	004435003	1		PROTEZIONE	SHIELD	PROTECTION	ABDECKUNG	DEFENSA
3	009444151	5		RONDELLA	WASHER	RONDELLE	SCHEIBE	ARANDELA
4	008700660	2		VITE	SCREW	VIS	SCHRAUBE	TORNILLO
5	0044001454	1		PROTEZIONE	SHIELD	PROTECTION	ABDECKUNG	DEFENSA
6	008700449	2		VITE	SCREW	VIS	SCHRAUBE	TORNILLO
7	004432031	4		AMMORTIZZATORE	SHOCK ABSORBER	AMORTISSEUR	STOSSDAEMPFER	AMORTIGUADOR
8	008201001	4		DADO	NUT	ECROU	MUTTER	TUERCA
9	008451005	4		RONDELLA	WASHER	RONDELLE	SCHEIBE	ARANDELA
10	008401006	4		RONDELLA	WASHER	RONDELLE	SCHEIBE	ARANDELA
11	004424067	2		SEMIANELLO FILETTATO	HALF RING	DEMI-BAGUE	RINGHAELFTE	SEMIANILLO
12	004424070	2		ANELLO DOPPIO CONO	BI-CONE RING	BI-CONE	DICHTKEGEL	ANILLO BICONICO
13	008300903	4		PRIGIONIERO	STUD	GOUJON	STIFTSCHRAUBE	ESPARRAGO
14	004424068	2		SEMIANELLO	HALF RING	DEMI-BAGUE	RINGHAELFTE	SEMIANILLO
15	008440806	4		RONDELLA	WASHER	RONDELLE	SCHEIBE	ARANDELA
16	008200825	4		DADO	NUT	ECROU	MUTTER	TUERCA
17	004437428	2		SUPPORTO	SUPPORT	SUPPORT	LAGER	SOPORTE
18	008410508	16		RONDELLA	WASHER	RONDELLE	SCHEIBE	ARANDELA
19	008100504	16		VITE	SCREW	VIS	SCHRAUBE	TORNILLO
20	008200503	16		DADO	NUT	ECROU	MUTTER	TUERCA
21	008400801	4		RONDELLA	WASHER	RONDELLE	SCHEIBE	ARANDELA
22	008410806	4		RONDELLA	WASHER	RONDELLE	SCHEIBE	ARANDELA
23	008200808	4		DADO	NUT	ECROU	MUTTER	TUERCA
24	004430979	1		SILENZIATORE	SILENCER	SILENCIEUX	AUSPUFFTOPF	SILENCIADOR
24	004432231	1	95	SILENZIATORE	SILENCER	SILENCIEUX	AUSPUFFTOPF	SILENCIADOR

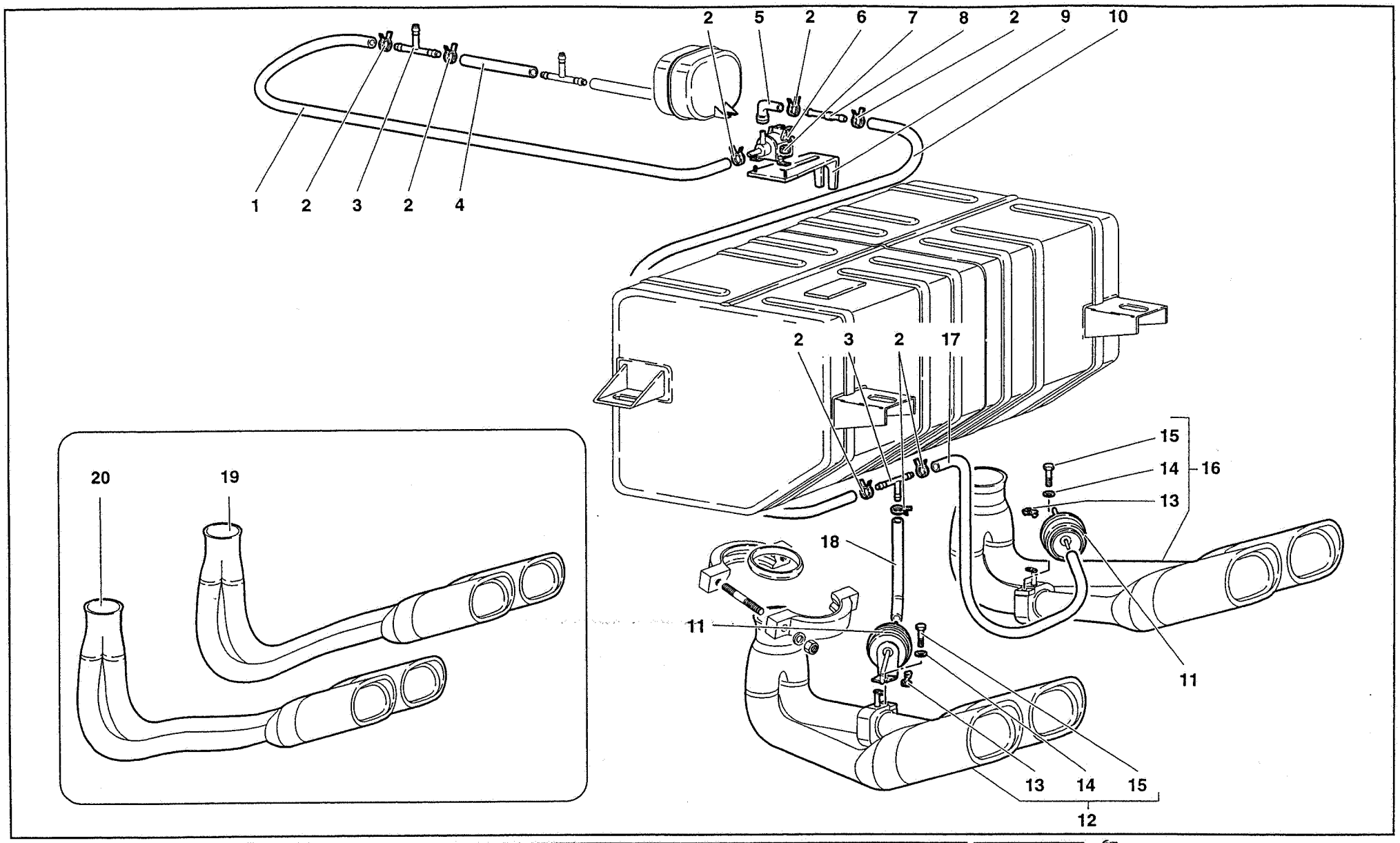
2
5
2
6
7
8
2
9
10
1
2
3
2
4
2
3
2
17
15
14
16
13
18
11
11
20
19
13
14
15
12

Rif. Ref. Réf. Bez. Ref.	Codice Part number Numero des pièces Teilnummer Codigo	Q.tà Q.ty Q.té Stk. C.dad	Versione Version Version Version Versión	DESCRIZIONE	DESCRIPTION	DESCRIPTION	BESCHREIBUNG	DESCRIPCION
1	004437810	1		TUBO FLESSIBILE	FLEX. HOSE	TUYAU FLEXIBLE	SCHLAUCH	MANGA FLEXIBLE
2	008830128	8		FASCETTA	STRAP	COLLIER	HALTEBAND	ABRAZADERA
3	007014169	2		RACCORDO TRE VIE	CONNECTION	RACCORD	STUTZEN	RACOR
4	004437808	1		TUBO FLESSIBILE	FLEX. HOSE	TUYAU FLEXIBLE	SCHLAUCH	MANGA FLEXIBLE
5	001329321	1		RACCORDO	CONNECTION	RACCORD	STUTZEN	RACOR
6	004627300	1		ELETTROVALVOLA	ELECTRO-VALVE	SOUPAPE ELECTRIQ.	STEUERVENTIL	ELECTROVALVULA
7	008200406	2		DADO	NUT	ECROU	MUTTER	TUERCA
8	001329319	1		RACCORDO	CONNECTION	RACCORD	STUTZEN	RACOR
9	001336194	1		SUPPORTO	SUPPORT	SUPPORT	LAGER	SOPORTE
10	004437810	1		TUBO FLESSIBILE	FLEX. HOSE	TUYAU FLEXIBLE	SCHLAUCH	MANGA FLEXIBLE
11	001336037	2		ATTUATORE	CONTROL	COMMANDE	BETAETIGUNGS-	MANDO
12	004437812	1		TERMINALE SX	LEFT TERMINAL	BORNE	KABELSCHUH	TERMINAL
13	001337177	2		FERMAGLIO	CLIP	AGRAFE	KLEMMSTUECK	SUJETADOR
14	008400606	2		RONDELLA	WASHER	RONDELLE	SCHEIBE	ARANDELA
15	008100616	2		VITE	SCREW	VIS	SCHRAUBE	TORNILLO
16	004437813	1		TERMINALE DX	RIGHT TERMINAL	BORNE	KABELSCHUH	TERMINAL
17	004437811	1		TUBO FLESSIBILE	FLEX. HOSE	TUYAU FLEXIBLE	SCHLAUCH	MANGA FLEXIBLE
18	004438267	1		TUBO FLESSIBILE	FLEX. HOSE	TUYAU FLEXIBLE	SCHLAUCH	MANGA FLEXIBLE
19	004436184	1	71	TERMINALE DX	RIGHT TERMINAL	BORNE	KABELSCHUH	TERMINAL
19	004436184	1	80	TERMINALE DX	RIGHT TERMINAL	BORNE	KABELSCHUH	TERMINAL
19	004436184	1	96	TERMINALE DX	RIGHT TERMINAL	BORNE	KABELSCHUH	TERMINAL
20	004436183	1	71	TERMINALE SX	RIGHT TERMINAL	BORNE	KABELSCHUH	TERMINAL
20	004436183	1	80	TERMINALE SX	RIGHT TERMINAL	BORNE	KABELSCHUH	TERMINAL
20	004436183	1	96	TERMINALE SX	RIGHT TERMINAL	BORNE	KABELSCHUH	TERMINAL

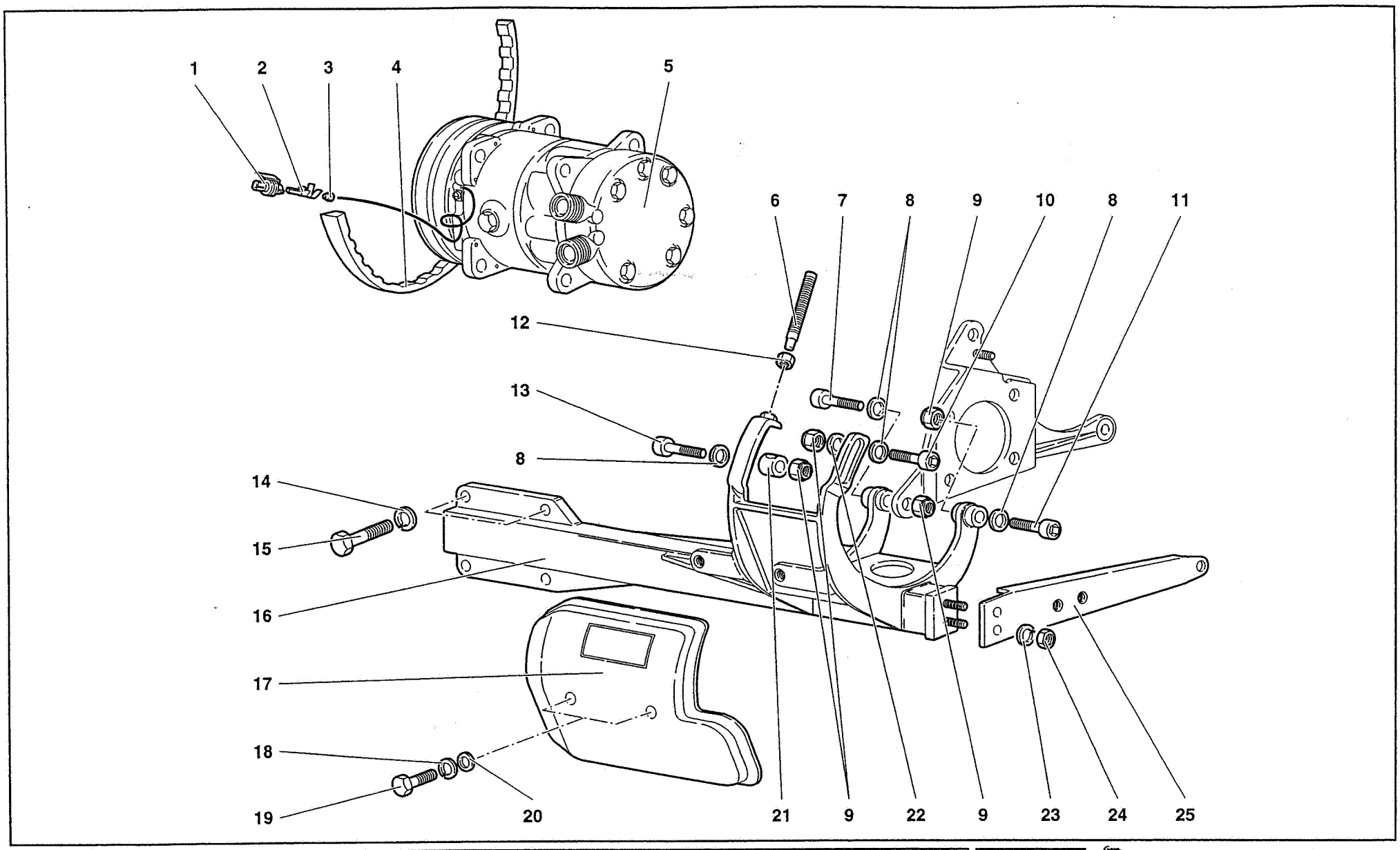
1
2
3
4
5
6
7
8
9
10
8
11
12
13
8
14
15
16
17
18
19
20
21
9
22
9
23
24
25

Rif. Ref. Réf. Bez. Ref.	Codice Part number Numero des pièces Teilnummer Codigo	Q.tà Q.ty Q.té Stk. C.dad	Versione Version Version Version Versión	DESCRIZIONE	DESCRIPTION	DESCRIPTION	BESCHREIBUNG	DESCRIPCION
1	006136453	1		CONNESSIONE	CONNECTION	CONNEXION	LEITUNG	CABLE
2	006136454	1		LINGUETTA	KEY	LINGUET	SCHEIBENFEDER	CHAVETA
3	006136447	1		GOMMA	RUBBER	CAUTCHOUC	GUMMI	CAUCHO
4	004534071	1		CINGHIA	BELT	COURROIE	RIEMEN	CORREA
5	004535409	1		COMPRESSORE	AIR COMPRESSOR	COMPRESSEUR D'AIR	LUFTPRESSER	COMPRESOR
6	008700841	1		VITE	SCREW	VIS	SCHRAUBE	TORNILLO
7	008701008	1		VITE	SCREW	VIS	SCHRAUBE	TORNILLO
8	008411002	4		RONDELLA	WASHER	RONDELLE	SCHEIBE	ARANDELA
9	008201008	4		DADO	NUT	ECROU	MUTTER	TUERCA
10	008701017	1		VITE	SCREW	VIS	SCHRAUBE	TORNILLO
11	008701014	1		VITE	SCREW	VIS	SCHRAUBE	TORNILLO
12	008200801	1		DADO	NUT	ECROU	MUTTER	TUERCA
13	008701020	1		VITE	SCREW	VIS	SCHRAUBE	TORNILLO
14	008410810	4		RONDELLA	WASHER	RONDELLE	SCHEIBE	ARANDELA
15	008100830	4		VITE	SCREW	VIS	SCHRAUBE	TORNILLO
16	004535242	1		SUPPORTO	SUPPORT	SUPPORT	LAGER	SOPORTE
17	004535934	1		PROTEZIONE	SHIELD	PROTECTION	ABDECKUNG	DEFENSA
18	008410602	2		RONDELLA	WASHER	RONDELLE	SCHEIBE	ARANDELA
19	008100601	2		VITE	SCREW	VIS	SCHRAUBE	TORNILLO
20	008400606	2		RONDELLA	WASHER	RONDELLE	SCHEIBE	ARANDELA
21	004529646	1		DISTANZIALE	SPACER	ENTRETOISE	ABSTANDSTUECK	SEPARADOR
22	008401028	1		RONDELLA	WASHER	RONDELLE	SCHEIBE	ARANDELA
23	008410810	2		RONDELLA	WASHER	RONDELLE	SCHEIBE	ARANDELA
24	008200801	2		DADO	NUT	ECROU	MUTTER	TUERCA
25	004529645	1		TIRANTE	TIE ROD	TIRANT	STANGE	VARILLA

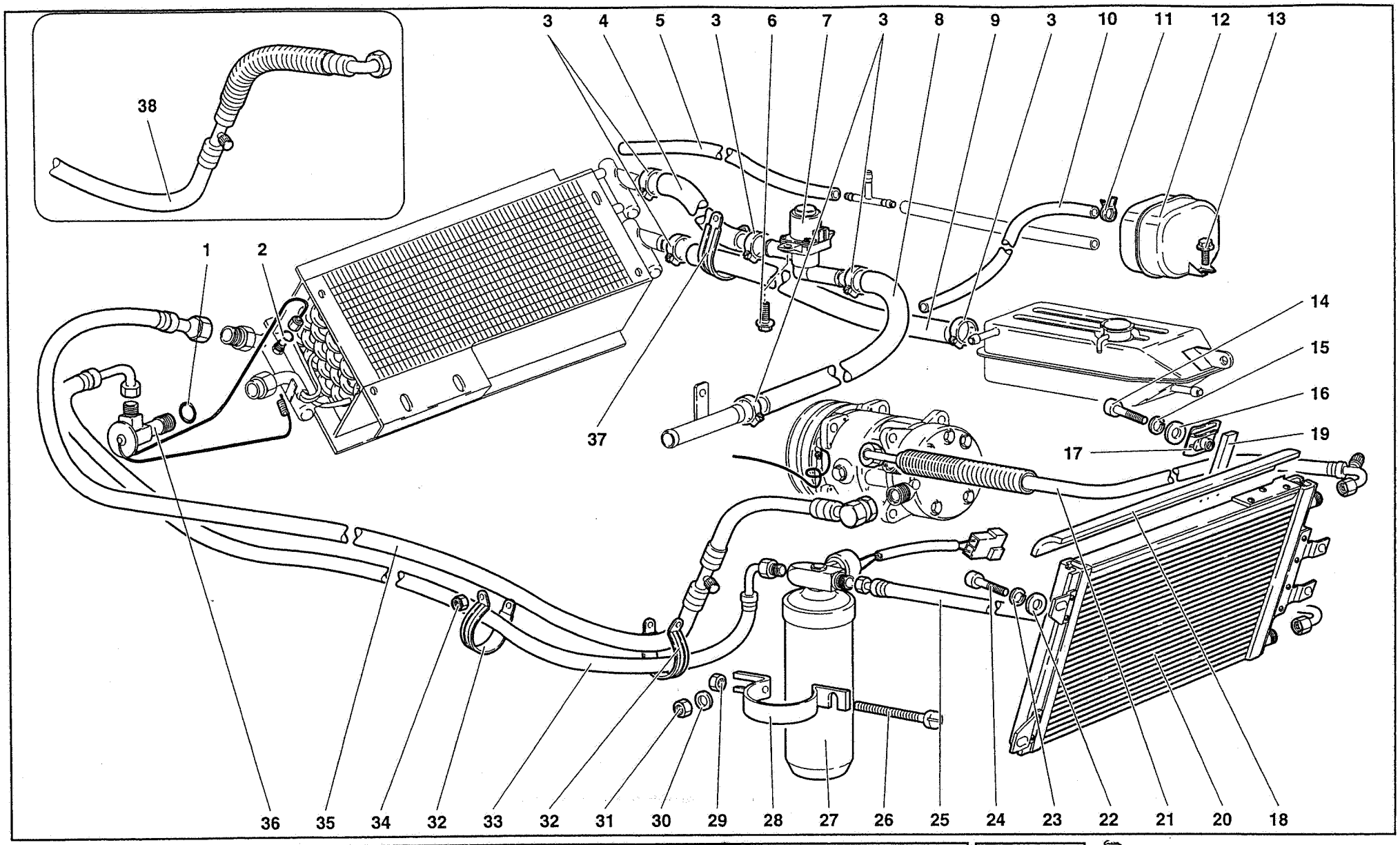

45	MY 98	IMPIANTO DI CLIMATIZZAZIONE CLIMATE CONTROL SYSTEME DE CLIMATISATION KLIMAANLAGE SISTEMA DE CLIMATIZACIÓN	45.02.00	Diablo SV 11/1998

Rif. Ref. Réf. Bez. Ref.	Codice Part number Numero des pièces Teilnummer Codigo	Q.tà Q.ty Q.té Stk. C.dad	Versione Version Version Version Versión	DESCRIZIONE	DESCRIPTION	DESCRIPTION	BESCHREIBUNG	DESCRIPCION
1	004535912	1		ANELLO TENUTA	SEAL	JOINT D'ETANCHEITE	DICHTRING	JUNTA HERMETICA
2	004535915	1		ANELLO TENUTA	SEAL	JOINT D'ETANCHEITE	DICHTRING	JUNTA HERMETICA
3	008832003	6		FASCETTA	STRAP	COLLIER	HALTEBAND	ABRAZADERA
4	004734346	1		TUBO	PIPE	TUYAU	ROHR	TUBO
5	009414600	1		TUBO	PIPE	TUYAU	ROHR	TUBO
6	008700663	2		VITE	SCREW	VIS	SCHRAUBE	TORNILLO
7	006031658	1		ELETTROVALVOLA	ELECTRO-VALVE	SOUPAPE ELECTRI.	STEUERVENTIL	ELECTROVALVULA
8	004734347	1		TUBO	PIPE	TUYAU	ROHR	TUBO
9	001734332	1		TUBO	PIPE	TUYAU	ROHR	TUBO
10	006237078	1		TUBO	PIPE	TUYAU	ROHR	TUBO
11	008830128	2		FASCETTA	STRAP	COLLIER	HALTEBAND	ABRAZADERA
12	001323406	1		SERBATOIO VUOTO	VACUUM TANK	RESERVOIR DEPRES-	UNTERDRUCKBEHAEL-	DEPOSITO DE VACIO
13	008700663	2		VITE	SCREW	VIS	SCHRAUBE	TORNILLO
14	008700614	2		VITE	SCREW	VIS	SCHRAUBE	TORNILLO
15	008410611	2		RONDELLA	WASHER	RONDELLE	SCHEIBE	ARANDELA
16	008400607	2		RONDELLA	WASHER	RONDELLE	SCHEIBE	ARANDELA
17	008220601	2		MOLLETTA	CLIP	AGRAFE	KLEMMSTUECK	SUJETADOR
18	004531592	2		GUARNIZIONE	GASKET	GUARNITURE	DICHTUNG	GUARNIZIONE
19	004531591	2		GUARNIZIONE	GASKET	GUARNITURE	DICHTUNG	GUARNIZIONE
20	0045001234	1		CONDENSATORE CONDIZIONATORE	A/C CONDENSER	CONDENSATEUR	KONDENSATOR	CONDENSADOR
21	0045001269	1		TUBO	PIPE	TUYAU	ROHR	TUBO
22	008400607	4		RONDELLA	WASHER	RONDELLE	SCHEIBE	ARANDELA
23	008410611	4		RONDELLA	WASHER	RONDELLE	SCHEIBE	ARANDELA
24	008700614	4		VITE	SCREW	VIS	SCHRAUBE	TORNILLO
25	0045001270	1		TUBO	PIPE	TUYAU	ROHR	TUBO
26	008700542	1		VITE	SCREW	VIS	SCHRAUBE	TORNILLO
27	004535411	1		FILTRO DEIDRATORE	FILTER	FILTRE	FILTER	FILTRO
28	004531395	1		FASCETTA	STRAP	COLLIER	HALTEBAND	ABRAZADERA
29	008200503	1		DADO	NUT	ECROU	MUTTER	TUERCA
30	008400801	2		RONDELLA	WASHER	RONDELLE	SCHEIBE	ARANDELA
31	008200804	2		DADO	NUT	ECROU	MUTTER	TUERCA
32	008834401	6		FASCETTA	STRAP	COLLIER	HALTEBAND	ABRAZADERA
33	004535415	1		TUBO	PIPE	TUYAU	ROHR	TUBO
34	008200606	8		DADO	NUT	ECROU	MUTTER	TUERCA
35	004535416	1		TUBO	PIPE	TUYAU	ROHR	TUBO
36	004535412	1		VALVOLA DI ESPANSIONE	VALVE	SOUPAPE	VENTIL	VALVULA
37	008834401	2		FASCETTA	STRAP	COLLIER	HALTEBAND	ABRAZADERA
38	004535935	1	71	TUBO	PIPE	TUYAU	ROHR	TUBO
38	004535935	1	96	TUBO	PIPE	TUYAU	ROHR	TUBO

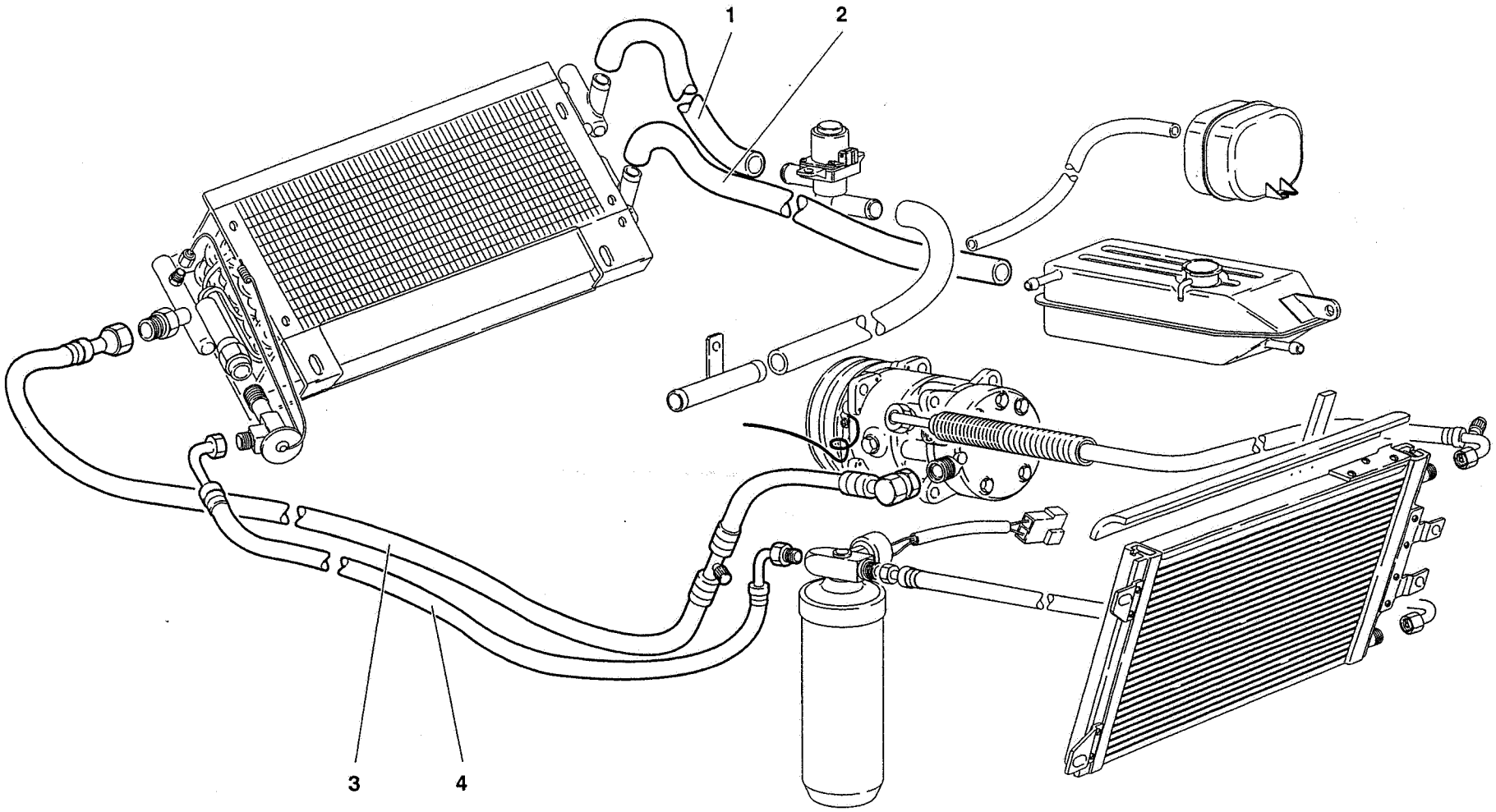
1
2
3
4

Rif. Ref. Réf. Bez. Ref.	Codice Part number Numero des pièces Teilnummer Codigo	Q.tà Q.ty Q.té Stk. C.dad	Versione Version Version Version Versión	DESCRIZIONE	DESCRIPTION	DESCRIPTION	BESCHREIBUNG	DESCRIPCION
1	004734657	1		TUBO	PIPE	TUYAU	ROHR	TUBO
2	004732718	1		TUBO	PIPE	TUYAU	ROHR	TUBO
3	004535862	1		TUBO	PIPE	TUYAU	ROHR	TUBO
4	004535863	1		TUBO	PIPE	TUYAU	ROHR	TUBO

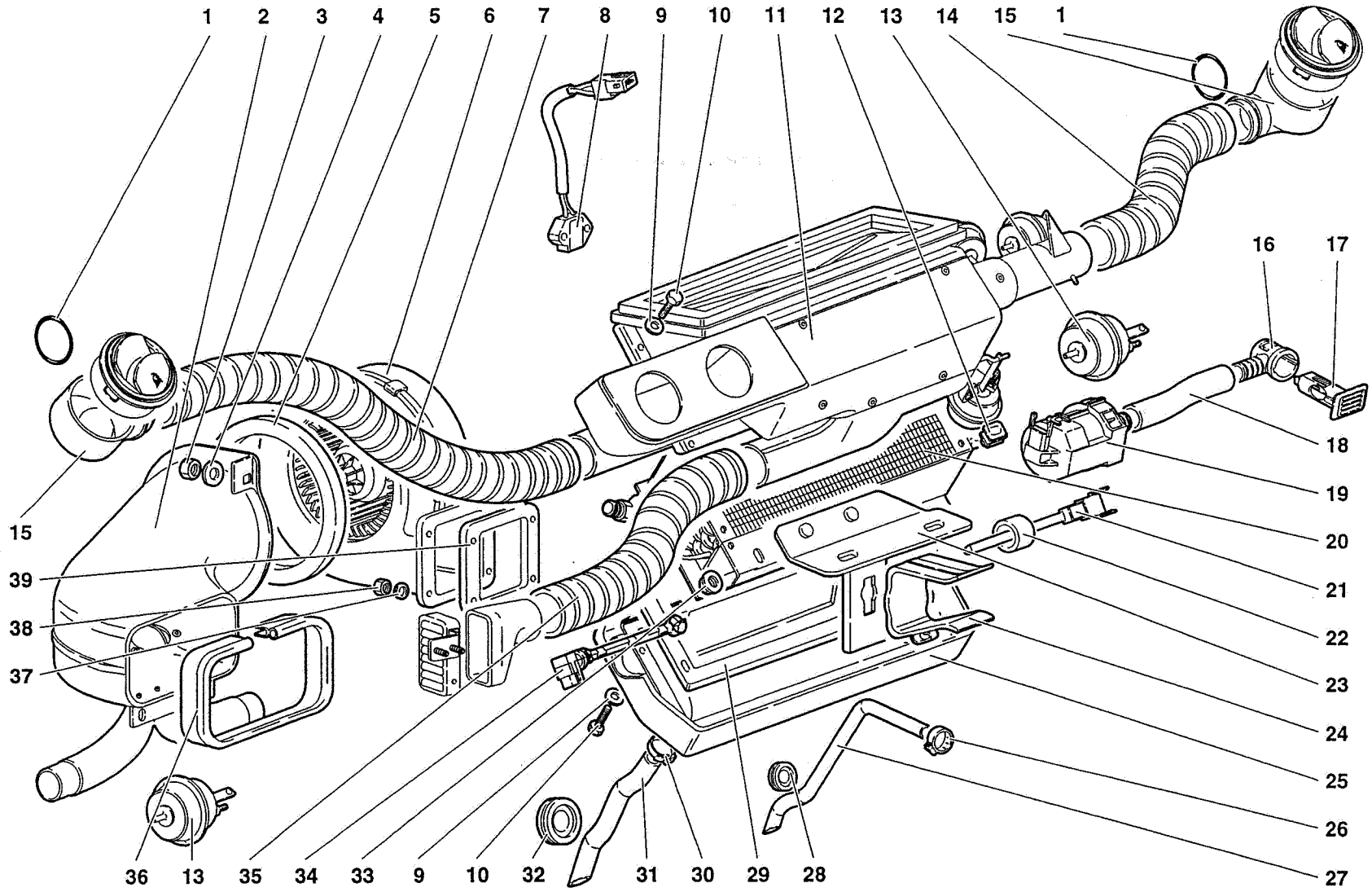
1
2
3
4
5
6
7
8
9
10
11
12
13
14
15
1
16
17
18
19
20
21
22
23
24
25
26
27
15
39
38
37
36
13
35
34
33
9
10
32
31
30
29
28

Rif. Ref. Réf. Bez. Ref.	Codice Part number Numero des pièces Teilnummer Codigo	Q.tà Q.ty Q.té Stk. C.dad	Versione Version Version Version Versión	DESCRIZIONE	DESCRIPTION	DESCRIPTION	BESCHREIBUNG	DESCRIPCION
1	008604401	2		ANELLO TENUTA	SEAL	JOINT D'ETANCHEITE	DICHTRING	JUNTA HERMETICA
2	009453182	1		CONVOGLIATORE	CONVEYOR	CONVOYEUR	LEITBLECH	CANALIZADOR
3	008200606	3		DADO	NUT	ECROU	MUTTER	TUERCA
4	008400607	3		RONDELLA	WASHER	RONDELLE	SCHEIBE	ARANDELA
5	009490202	1		GUARNIZIONE	GASKET	GUARNITURE	DICHTUNG	GUARNIZIONE
6	004537176	1		ELETTROVENTILATORE	ELECTROFAN	VENTILATEUR ELEC.	ELEKTR.LUEFTER	ELECTROVENTIL.
7	009414546	1		TUBO	PIPE	TUYAU	ROHR	TUBO
8	004526662	1		SENSORE TEMP. ESTERNA	TEMPER. SENSOR	SENSEUR	TEMP.-GEBER	SENSOR TEMPERA.
9	008400506	8		RONDELLA	WASHER	RONDELLE	SCHEIBE	ARANDELA
10	008100502	8		VITE	SCREW	VIS	SCHRAUBE	TORNILLO
11	009414038	1		CONVOGLIATORE	CONVEYOR	CONVOYEUR	LEITBLECH	CANALIZADOR
12	008220503	8		MOLLETTA	CLIP	AGRAFE	KLEMMSTUECK	SUJETADOR
13	009414548	6		ATTUATORE	CONTROL	COMMANDE	BETAETIGUNGS-	MANDO
14	009414545	1		TUBO	PIPE	TUYAU	ROHR	TUBO
15	007014135	2		RACCORDO	CONNECTION	RACCORD	STUTZEN	RACOR ORIENTABLE
16	004526666	1		RACCORDO	CONNECTION	RACCORD	STUTZEN	RACOR
17	004526661	1		SENSORE TEMP. ABITACOLO	TEMPER. SENSOR	SENSEUR	TEMP.-GEBER	SENSOR TEMPERA.
18	006032223	1		TUBO	PIPE	TUYAU	ROHR	TUBO
19	004526665	1		ELETTROVENTOLA	ELECTROFAN	VENTILA. ELECTRIC	ELEKTRIC LUEFTER	ELECTROVENT.
20	004535410	1		EVAPORATORE - RISCALDATORE	EVAPORATOR	EVAPORATEUR	VERDAMPFER	EVAPORADOR
21	004526663	1		SENSORE TEMPERATURA	TEMPER. SENSOR	SENSEUR	TEMP.-GEBER	SENSOR TEMPERA.
22	004532839	1		PROTEZIONE	SHIELD	PROTECTION	ABDECKUNG	DEFENSA
23	005931538	1		SUPPORTO	SUPPORT	SUPPORT	LAGER	SOPORTE
24	005931539	1		SUPPORTO RADIO	SUPPORT	SUPPORT	LAGER	SOPORTE
25	009414505	1		CONVOGLIATORE	CONVEYOR	CONVOYEUR	LEITBLECH	CANALIZADOR
26	008831117	1		FASCETTA	STRAP	COLLIER	HALTEBAND	ABRAZADERA
27	009414537	1		TUBO SCARICO	PIPE	TUYAU	LEITUNG	TUBO
28	008612804	1		GUARNIZIONE	GASKET	GUARNITURE	DICHTUNG	GUARNIZIONE
29	009490203	1		GUARNIZIONE	GASKET	GUARNITURE	DICHTUNG	GUARNIZIONE
30	008832806	1		FASCETTA	STRAP	COLLIER	HALTEBAND	ABRAZADERA
31	009414540	1		TUBO SCARICO	PIPE	TUYAU	ROHR	TUBO
32	008611606	1		GUARNIZIONE	GASKET	GUARNITURE	DICHTUNG	GUARNIZIONE
33	008200614	2		DADO	NUT	ECROU	MUTTER	TUERCA
34	004526664	1		SENSORE TEMP. ARIA	TEMPER. SENSOR	SENSEUR	TEMP.-GEBER	SENSOR TEMPERA.
35	009414544	1		TUBO	PIPE	TUYAU	ROHR	TUBO
36	009490201	1		GUARNIZIONE	GASKET	GUARNITURE	DICHTUNG	GUARNIZIONE
37	008400401	4		RONDELLA	WASHER	RONDELLE	SCHEIBE	ARANDELA
38	008200406	4		DADO	NUT	ECROU	MUTTER	TUERCA
39	004731661	1		GUARNIZIONE	GASKET	GUARNITURE	DICHTUNG	GUARNIZIONE

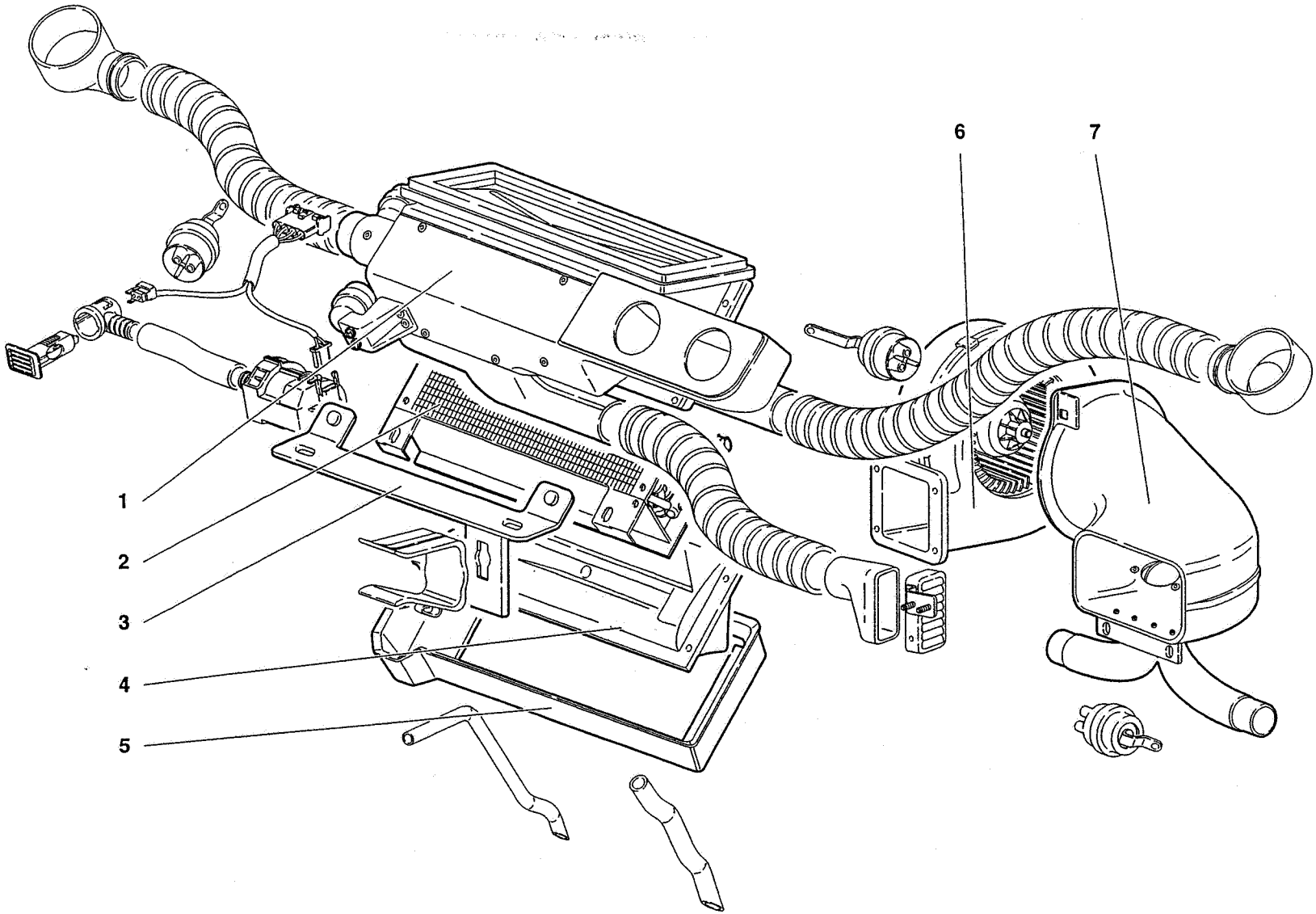
1
2
3
4
5
6
7

Rif. Ref. Réf. Bez. Ref.	Codice Part number Numero des pièces Teilnummer Codigo	Q.tà Q.ty Q.té Stk. C.dad	Versione Version Version Version Versión	DESCRIZIONE	DESCRIPTION	DESCRIPTION	BESCHREIBUNG	DESCRIPCION
1	009414039	1		CONVOGLIATORE	CONVEYOR	CONVOYEUR	LEITBLECH	CANALIZADOR
2	004535864	1		EVAPORATORE - RISCALDATORE	RADIATOR	MASSE RADIANTE	KUEHLERMASSE	MASA RADIANTE
3	005937771	1		SUPPORTO	SUPPORT	SUPPORT	LAGER	SOPORTE
4	009414534	1		CONVOGLIATORE	CONVEYOR	CONVOYEUR	LEITBLECH	CANALIZADOR
5	009414539	1		VASCHETTA	PAN	CUVE	GEFASS	CUBA
6	004537175	1		ELETTROVENTILATORE	ELECTROFAN	VENTILATEUR ELEC.	ELEKTR.LUEFTER	ELECTROVENT.
7	009453131	1		CONVOGLIATORE	CONVEYOR	CONVOYEUR	LEITBLECH	CANALIZADOR

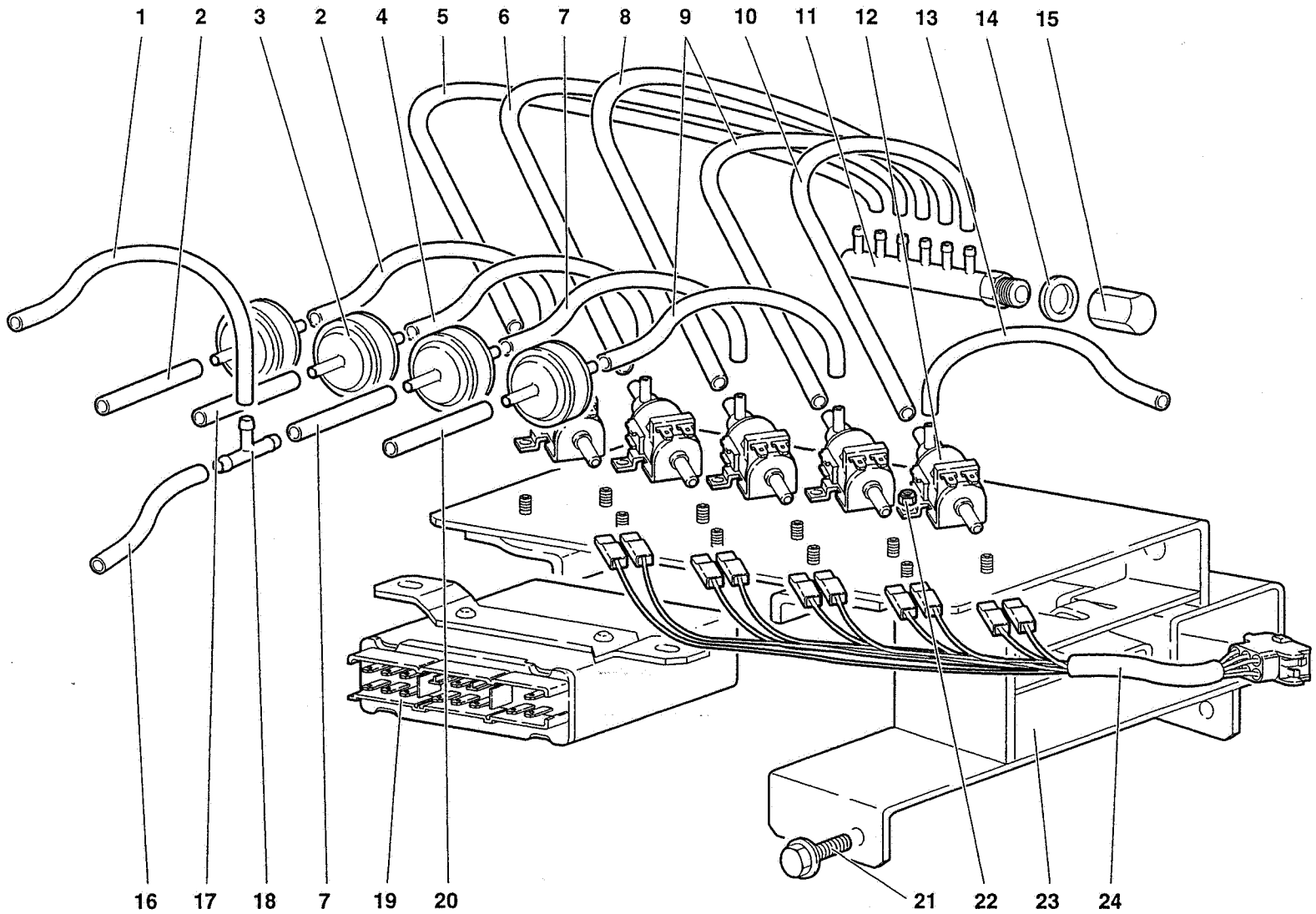
1
2
3
2
4
5
6
7
8
9
10
11
12
13
14
15
16
17
18
7
19
20
21
22
23
24

Rif. Ref. Réf. Bez. Ref.	Codice Part number Numero des pièces Teilnummer Codigo	Q.tà Q.ty Q.té Stk. C.dad	Versione Version Version Version Versión	DESCRIZIONE	DESCRIPTION	DESCRIPTION	BESCHREIBUNG	DESCRIPCION
1	009414649	1		TUBO FLESSIBILE	FLEX. HOSE	TUYAU FLEXIBLE	SCHLAUCH	MANGA FLEXIBLE
2	009414643	2		TUBO FLESSIBILE	FLEX. HOSE	TUYAU FLEXIBLE	SCHLAUCH	MANGA FLEXIBLE
3	009414633	4		VALVOLA	VALVE	SOUPAPE	VENTIL	VALVULA
4	009414645	1		TUBO FLESSIBILE	FLEX. HOSE	TUYAU FLEXIBLE	SCHLAUCH	MANGA FLEXIBLE
5	009414642	1		TUBO FLESSIBILE	FLEX. HOSE	TUYAU FLEXIBLE	SCHLAUCH	MANGA FLEXIBLE
6	009414644	1		TUBO FLESSIBILE	FLEX. HOSE	TUYAU FLEXIBLE	SCHLAUCH	MANGA FLEXIBLE
7	009414648	2		TUBO FLESSIBILE	FLEX. HOSE	TUYAU FLEXIBLE	SCHLAUCH	MANGA FLEXIBLE
8	009414647	1		TUBO FLESSIBILE	FLEX. HOSE	TUYAU FLEXIBLE	SCHLAUCH	MANGA FLEXIBLE
9	009414651	2		TUBO FLESSIBILE	FLEX. HOSE	TUYAU FLEXIBLE	SCHLAUCH	MANGA FLEXIBLE
10	009414653	1		TUBO FLESSIBILE	FLEX. HOSE	TUYAU FLEXIBLE	SCHLAUCH	MANGA FLEXIBLE
11	004621565	1		RACCORDO	CONNECTION	RACCORD	STUTZEN	RACOR ORIENTABLE
12	004627300	5		ELETTROVALVOLA	ELECTRO-VALVE	SOUPAPE ELECTRIQ.	STEUERVENTIL	ELECTROVALVULA
13	009414654	1		TUBO FLESSIBILE	FLEX. HOSE	TUYAU FLEXIBLE	SCHLAUCH	MANGA FLEXIBLE
14	008401008	1		RONDELLA	WASHER	RONDELLE	SCHEIBE	ARANDELA
15	009414606	1		TAPPO	PLUG	BOUCHON	STOPFEN	TAPON
16	009414650	1		TUBO FLESSIBILE	FLEX. HOSE	TUYAU FLEXIBLE	SCHLAUCH	MANGA FLEXIBLE
17	009414646	1		TUBO FLESSIBILE	FLEX. HOSE	TUYAU FLEXIBLE	SCHLAUCH	MANGA FLEXIBLE
18	007014169	1		RACCORDO	CONNECTION	RACCORD	STUTZEN	RACOR
19	004526659	1		CENTRALINA CLIMATIZZAZIONE	ELECTRONIC C. UNIT	DISPOSITIF DE COM.	ELEKTRONENSTEUER.	CENTRALITA ELEC.
20	009414652	1		TUBO FLESSIBILE	FLEX. HOSE	TUYAU FLEXIBLE	SCHLAUCH	MANGA FLEXIBLE
21	008700449	2		VITE	SCREW	VIS	SCHRAUBE	TORNILLO
22	008200401	10		DADO	NUT	ECROU	MUTTER	TUERCA
23	009414628	1		SUPPORTO	SUPPORT	SUPPORT	LAGER	SOPORTE
23	009414627	1	74	SUPPORTO	SUPPORT	SUPPORT	LAGER	SOPORTE
24	006130618	1		CABLAGGIO ELETTROV.	ELECT CABLE	CABLE	LEITUNG	CABLE